//New: Standard Safety Light Grille

High-Speed Doors

Technical Manual: Issue 01.03.2011

HÖRMANN

Hörmann High-Speed Doors

A broad programme for inside and outside

From low-cost design models to secure night doors

Hörmann high-speed doors are characterised by excellent material quality and reliable long-term function. They are used inside and outside to optimise the flow of traffic, improve room climate and save energy.

This broad programme includes transparent doors with flexible curtains that open vertically or horizontally.

For day/night doors, we also offer flexible high-speed doors combined with rolling shutters and sectional doors.

Hörmann high-speed doors comply with strict European safety requirements.

ift ZERTIFIZIERT

CE

Contents

All dimensions in mm.
Subject to design changes.

Spiral Doors

Technical data

			HSS 6530	HSS 6530 L
Use	Internal door		●	●
	External door		●	●
Speed	Opening speed approx. m/sec.		1.5 – 3.0	1.5 – 3.0
	Closing speed approx. m/sec.		0.5	0.5
Safety equipment	DIN EN 13241.1		●	●
Resistance to wind load	DIN EN 12424		Class 4	Class 4
Resistance to water penetration	DIN EN 12425		Class 2	Class 2
Air permeability	DIN EN 12426		Class 2	Class 2
Transmission of heat	DIN EN 12428		2.9 / 1.8 with Iso infill	2.9 / 1.8 with Iso infill
Acoustic insulation	DIN EN 52210 dB		31	31
Shutter sizes	Max. width LDB		6500	6500
	Max. height LDH		6000	4500
Fitting dimensions (space requirement) (See also the Technical Manual)	Operator side (with cladding)		430 (455)	430 (–)
	Bearing side (with cladding)		390 (415)	390 (–)
	Lintel (with cladding)		–	550 (–)
	Lintel LDH up to 4500 mm (with cladding)		950 (1000)	–
	Lintel LDH from 4501 to 5500 mm (with cladding)		970 (1020)	–
	Lintel LDH from 5501 to 6500 mm (with cladding)		950 (1000)	–
	Control in steel cabinet (W × H × D)		400 × 600 × 200	400 × 600 × 200
Door construction	Self-supporting		–	–
Door leaf counterbalance			●	●
Door leaf	Double-skinned profile thickness		30	30
	Thermal profile		●	●
Material/surface of door leaf	Anodised aluminium E6/EV1		●	●
	Aluminium, powder-coated, RAL to choose		○	○
Glazing	Single synthetic panes		–	–
	Double synthetic panes		○	○
Ventilation grille	Ventilation cross section depending on size/version		○	○
Operator and control	Frequency converter		●	●
	Connecting voltage		3-400 V, N, PE	3-400 V, N, PE
	Open-Stop-Close button		●	●
	Main switch all-pole switch off		●	●
	Fuse protection		16 A, K-characteristic	16 A, K-characteristic
	Protection category for operator and control		IP 54	IP 54
	Emergency-off button		○	○
	Route monitoring	Photocell	●	●
		Light grille	○	○
	Door area monitoring	Radar	○	○
		Induction loop	○	○
	Hold-open phase in sec.		1-200	1-200
	Closing edge safety device		●	●
	Electronic limit switch DES		●	●
Emergency opening	Emergency crank handle		–	–
	Emergency hand chain		●	●
	Counter weight/spring		–/–	–/–
	FU control with UPS 230 V		–	–
Volt-free contacts			○	○
Impulse generator			○	○
Safety devices			○	○

● Standard
○ Optional

Spiral Doors HSS 6530

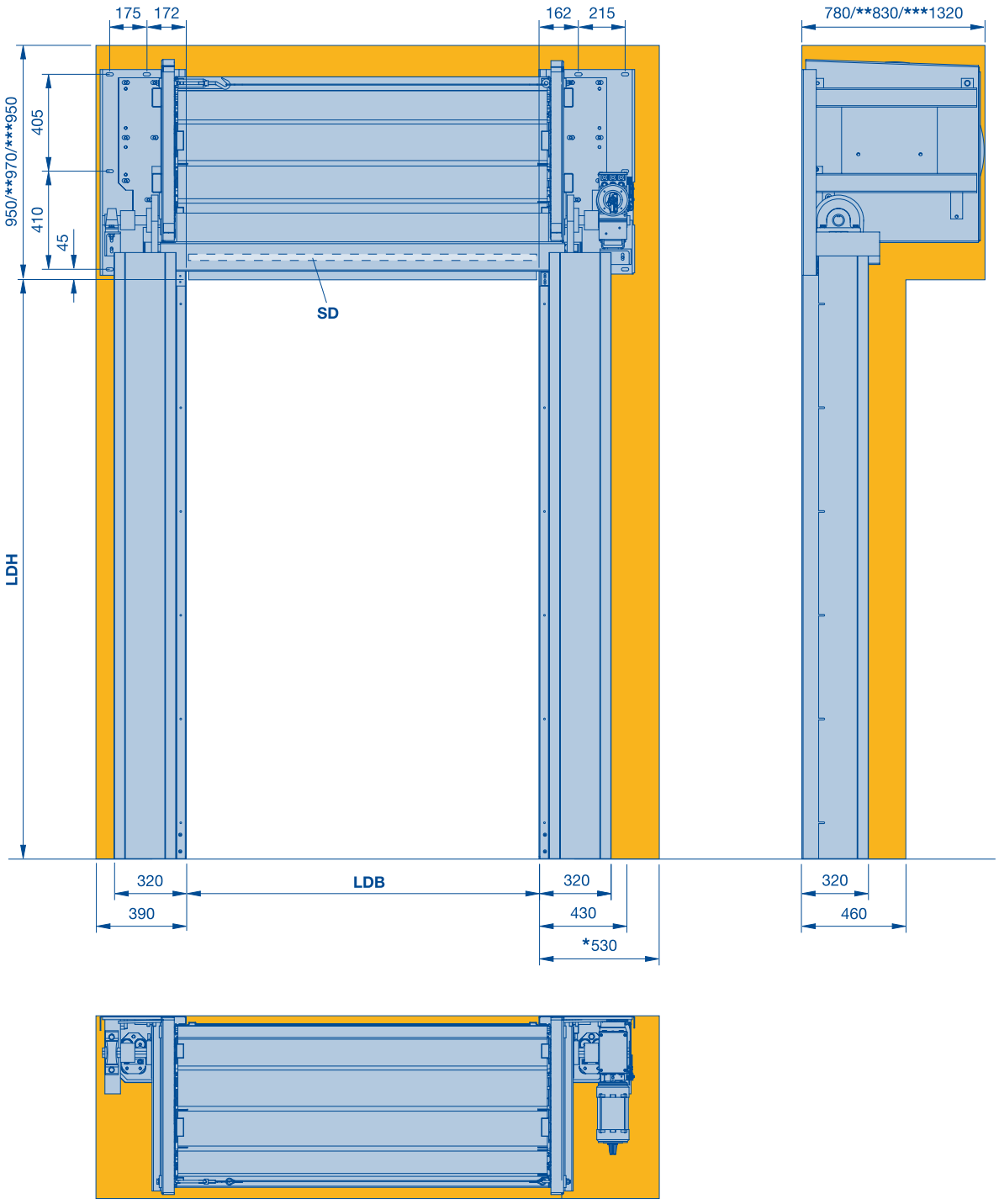

* Space required to dismantle the operator
** If LDH > 4500 mm – ≤ 5500 mm
*** If LDH > 5500 mm

LDH Clear passage height
LDB Clear passage width
SD Lintel seal = LDH + 100

Spiral Doors HSS 6530

Full cladding

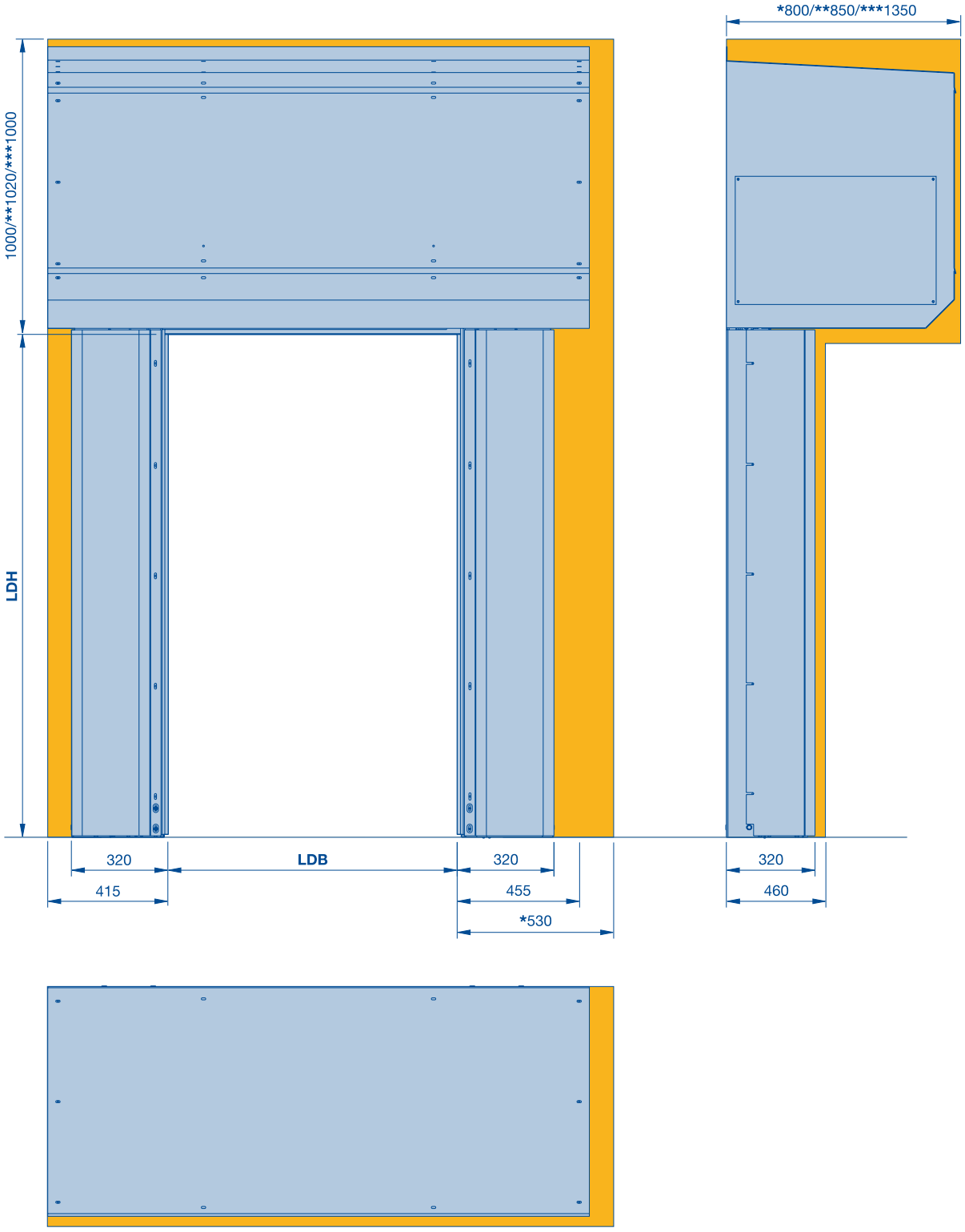

* Space required to dismantle the operator
** If LDH > 4500 mm – ≤ 5500 mm
*** If LDH > 5500 mm

LDH Clear passage height
LDB Clear passage width

Spiral Doors HSS 6530 L

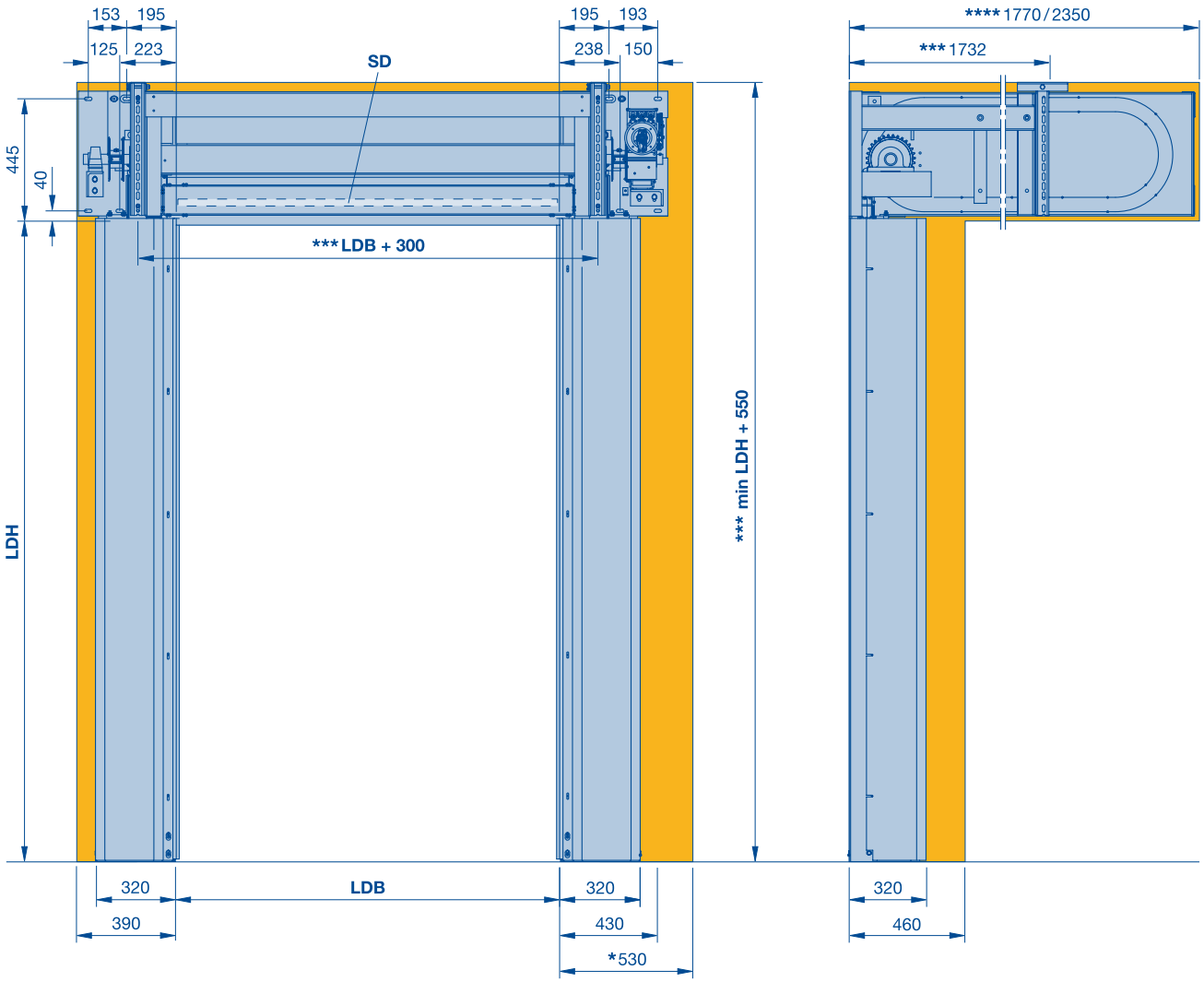

* Space required to dismantle the operator
** Centre fixing of ceiling suspension
*** LDH ≤ 3250 mm = 1770 mm
LDH > 3250 mm = 2350 mm

LDH Clear passage height
LDB Clear passage width
SD Lintel seal = LDH + 90

Spiral Doors

Technical data

			HS 7030 PU
Use	Internal door		●
	External door		●
Speed	Opening speed approx. m/sec.		1.5 – 2.5
	Closing speed approx. m/sec.		0.5 – 0.8
Safety equipment	DIN EN 13241.1		●
Resistance to wind load	DIN EN 12424		Class 4
Resistance to water penetration	DIN EN 12425		Class 3
Air permeability	DIN EN 12426		–
Transmission of heat	DIN EN 12428		1.95
Acoustic insulation	DIN EN 52210 dB		26
Shutter sizes	Max. width LDB		6500
	Max. height LDH		6000
Fitting dimensions (space requirement) (See also the Technical Manual)	Operator side (with cladding)		665 (665)
	Bearing side (with cladding)		365 (415)
	Lintel (with cladding)		–
	Lintel LDH up to 5000 mm (with cladding)		885 (970)
	Lintel LDH from 5001 to 6000 mm (with cladding)		920 (1005)
	Control in steel cabinet (W × H × D)		400 × 600 × 200
Door construction	Self-supporting		–
Door leaf counterbalance			●
Door leaf	Double-skinned section thickness		42
	Foamed door leaf		●
Material/surface of door leaf	Steel, RAL 9006		●
	Wet coating in RAL to choose		○
	Aluminium rail window, anodised aluminium E6/EV1		●
Glazing	Double synthetic panes		●
	Triple synthetic panes		○
Ventilation grille	Ventilation cross section depending on size/version (min. 30%)		○
Operator and control	Frequency converter		●
	Connecting voltage (3-phase)		3-400 V, N, PE
	Open-Stop-Close button		●
	Main switch all-pole switch off		●
	Fuse protection		16 A, K-characteristic
	Protection category for operator and control		IP 54
	Emergency-off button		○
	Closing edge safety device with energy chain		–
	Monitoring of the closing zone	Safety light grille IP 67	●
	External route monitoring	Photocell	–
		Light grille	○
	Door area monitoring	Radar presence detector	○
		Induction loop	○
	Hold-open phase in sec.		1-200
	Electronic limit switch DES		●
Emergency opening	Emergency crank handle		–
	Emergency hand chain		●
	Counter weight/spring		–/–
	FU control with UPS 230 V (1-phase)		–
Volt-free contacts			○
Impulse generator			○
Safety devices			○

● Standard
○ Optional

Spiral Doors HS 7030 PU

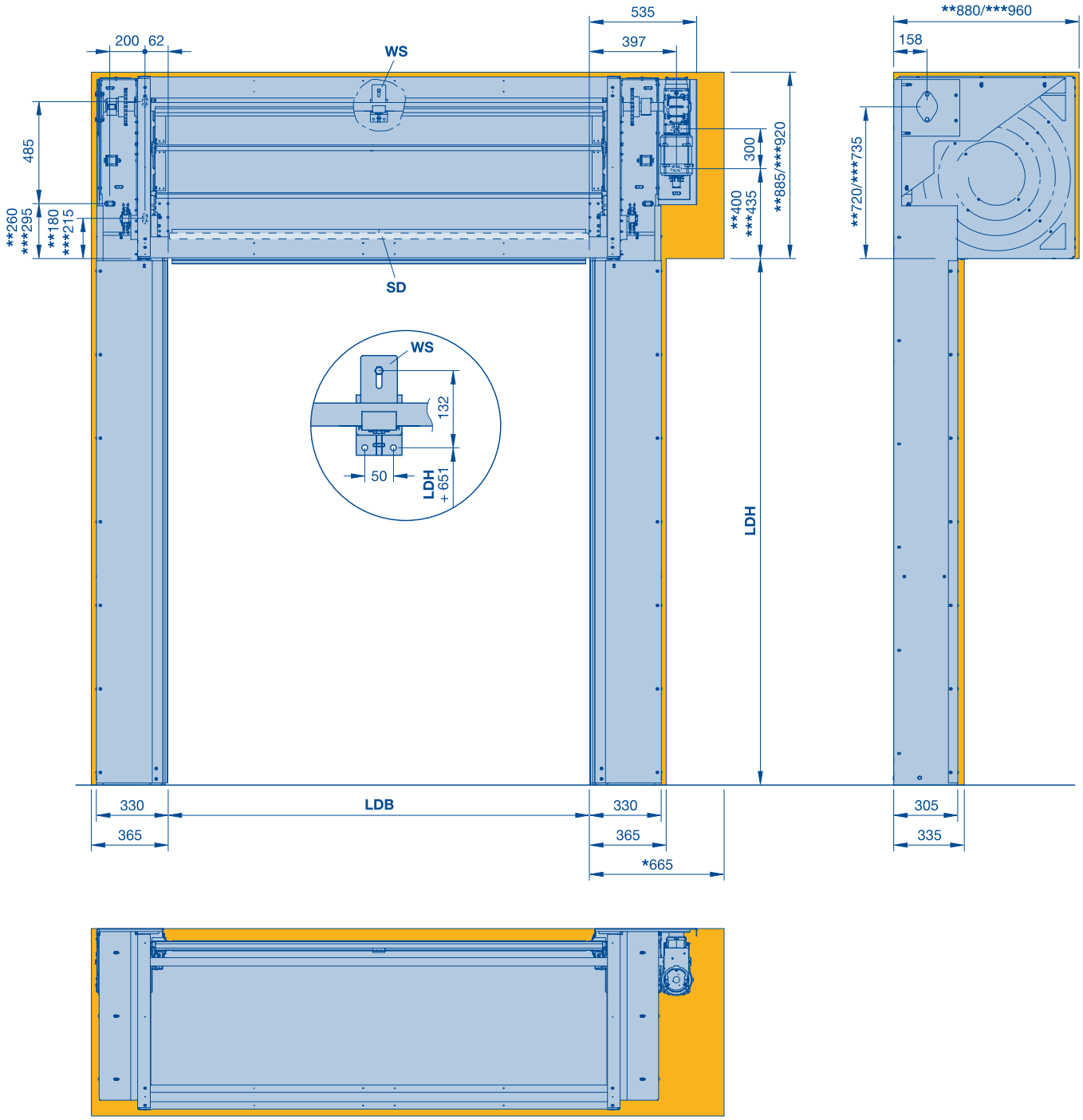

* Space required to fit/dismantle the operator
** If LDH ≤ 5000 mm
*** If LDH > 5000 mm – ≤ 6000 mm

LDH Clear passage height
LDB Clear passage width
SD Lintel seal = LDH + 90

WS Shaft supports
LDB > 3315 = 1 unit in centre
LDB > 5000 = 2 units equally distributed

Spiral Doors HS 7030 PU

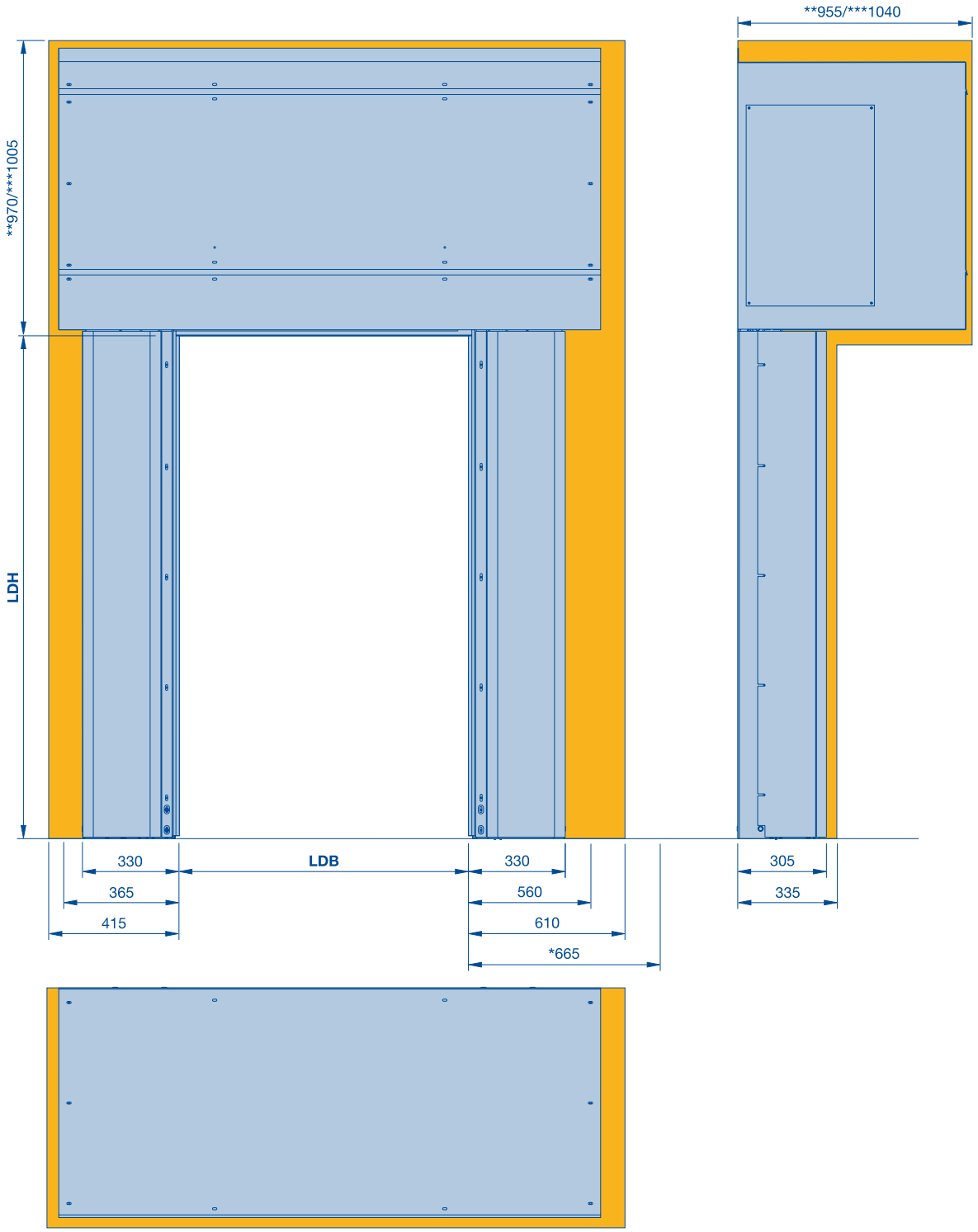

* Space required to dismantle the operator
** If LDH ≤ 5000 mm
*** If LDH > 5000 mm – ≤ 6000 mm

LDH Clear passage height
LDB Clear passage width

Notes

Flexible Internal Doors

Technical data

			V 2715 SEL R	V 5015 SEL	V 5030 SEL
Use	Internal door		●	●	●
	External door				Wind protected [1]
Speed	FU control	Opening speed approx. m/sec.	1.5	1.5	2.0 – 3.0
		Closing speed approx. m/sec.	0.8	0.8	0.8
Safety equipment	DIN EN 13241		●	●	●
Resistance to wind load	DIN EN 12424		Class 0	Class 0	Class 0/1 with aluminium bottom profile
Curtain stabilisation/WS	Alu/spring steel		○/●	●/–	–/●
Shutter sizes	Max. width LDB		2750	5000	5000
	Max. height LDH		3000	5000	5000
Fitting dimensions (space requirement) (See also the Technical Manual)	Operator side	LDB + mm (with cladding)	– (200)	345 (375)	385 (425)
	Bearing side	LDB + mm (with cladding)	– (200)	175 (175)	255 (290)
	Lintel	LDH + mm	–	440	440/520[1]
		LDH + mm, straight cladding	460	490	490/570[1]
		LDH + mm cladding 30° (5°)	–	630	630/710[1]
	FU control in plastic cabinet	(W × H × D)	200 × 400 × 200	200 × 400 × 200	200 × 400 × 200
	FU control in steel cabinet	(W × H × D) (stainless steel 1.4301) UPS	400 × 600 × 200	400 × 600 × 200	400 × 600 × 200
Anti-Crash/crash-protection	With automatic/manual start-up		Crash-protection	Anti-Crash	Anti-Crash
Door construction	Self-supporting		●	●	●
	Fabric/transparent	1.5/2.0 mm	●	●	●
	Transparent	4.0 mm	–	–	–
Curtain/door leaf tension			–	–	–
Material/surface guide	Galvanized steel		●	●	●
	Galvanized steel, coated, in colours based on RAL		○	○	○
	Polished stainless steel V2A		○	○	○
Shaft/operator cover	Straight		●	○	○
	30° chamfered (5°)		○	○	○
Operator and control	FU control		●	●	●
	Connecting voltage (1-phase)		1-230 V, N, PE	1-230 V, N, PE	1-230 V, N, PE
	Connecting voltage (3-phase)		–	–	3-400 V, N, PE
	Open-Stop-Close button		●	●	●
	FU control, main switch all-pole switch off, 1-phase/3-phase		○/–	○/–	○/●
	Fuse protection		16 A, K-characteristic	16 A, K-characteristic	16 A, K-characteristic
	Protection category	Operator, control	IP 54	IP 54	IP 54
	Emergency-off button		○	○	○
	Closing edge safety device	With energy chain	–	–	–
	Monitoring of the closing zone	Safety light grille IP 67	●	●	●
	External route monitoring	Photocell	○	○	○
		Light grille	○	○	○
	Door area monitoring	Radar presence detector	○	○	○
		Induction loop	○	○	○
	Hold-open phase in sec.		1-200	1-200	1-200
	Electronic limit switch DES		●	●	●
Emergency opening	Crank handle		–	●	●
	Emergency hand chain		–	–	–
	Counter weight/springs		–/–	–/–	–/–
	FU control with UPS 230 V (1-phase)		○	○	○
Volt-free contacts			○	○	○
Impulse generator			○	○	○
Safety devices			○	○	○

● Standard
○ Optional

WS Wind lock
1) Optional with aluminium bottom profile

Vertical High-Speed Doors V 2715 SEL R

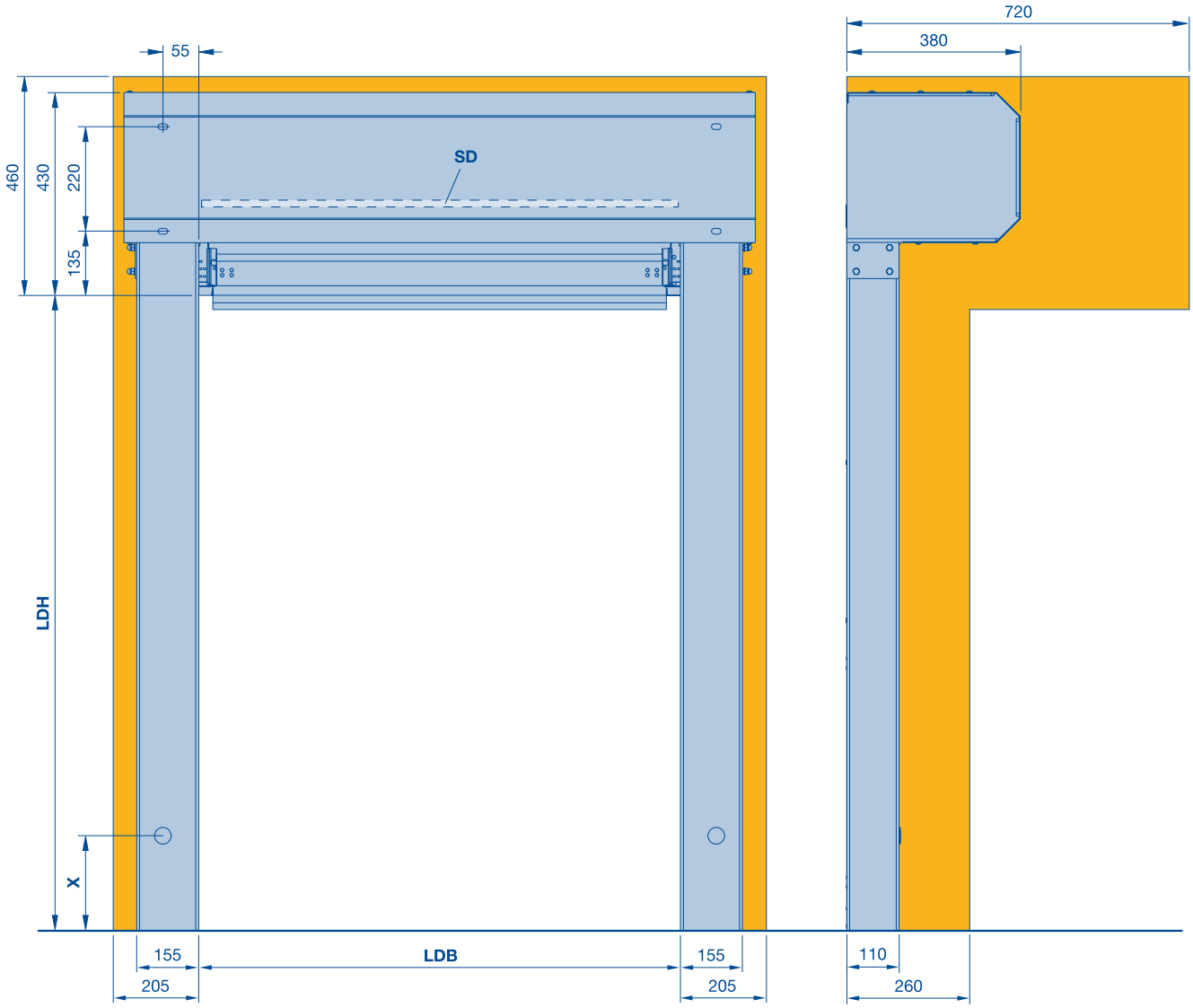

X Order-related
LDH Clear passage height
LDB Clear passage width
SD Lintel seal = LDH + 190

Vertical High-Speed Doors V 5015 SEL

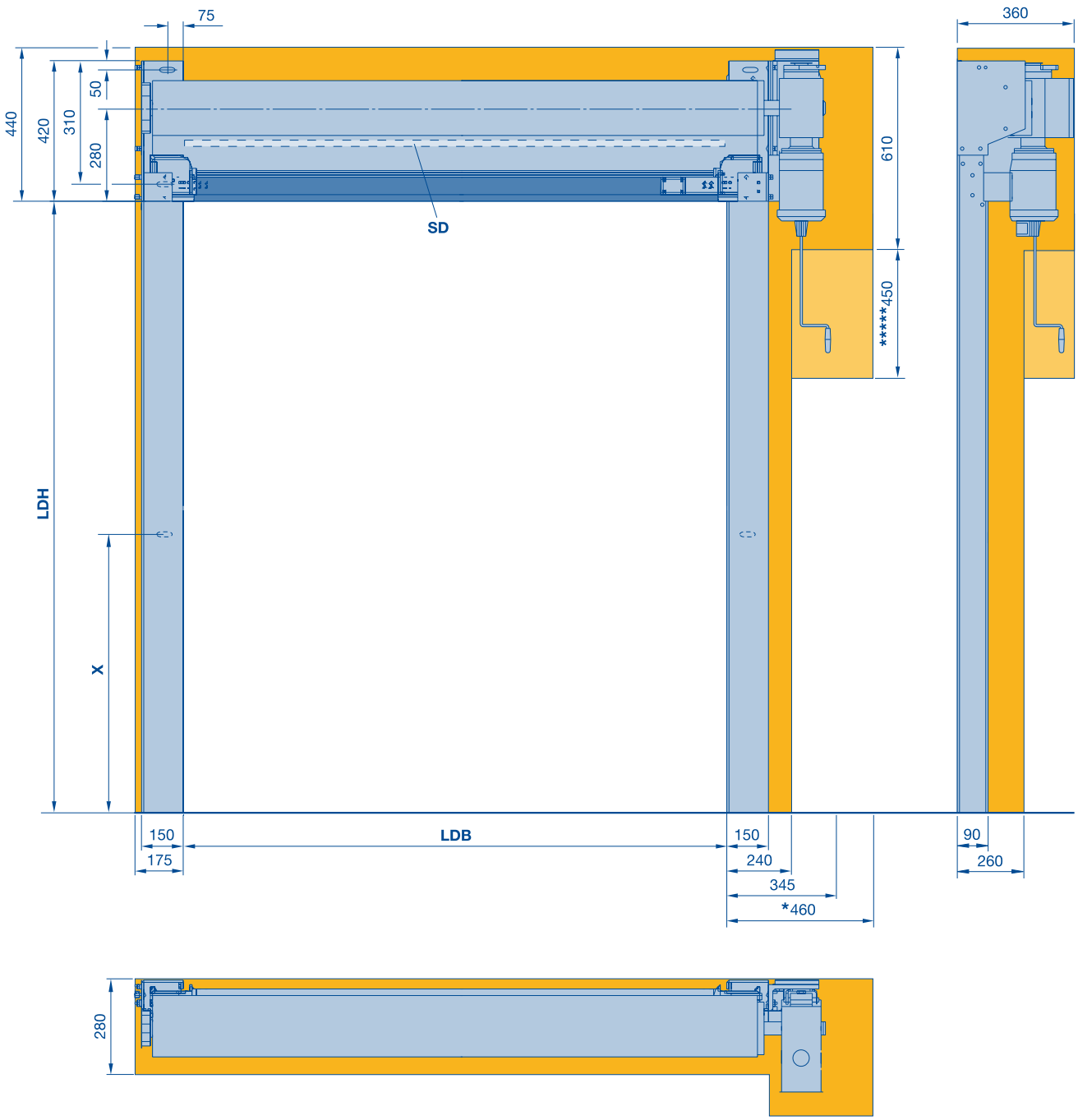

* Space required to dismantle the operator
***** For emergency crank handle
X Order-related

LDH Clear passage height
LDB Clear passage width
SD Lintel seal = LDH + 170

Vertical High-Speed Doors V 5015 SEL

Full cladding, straight

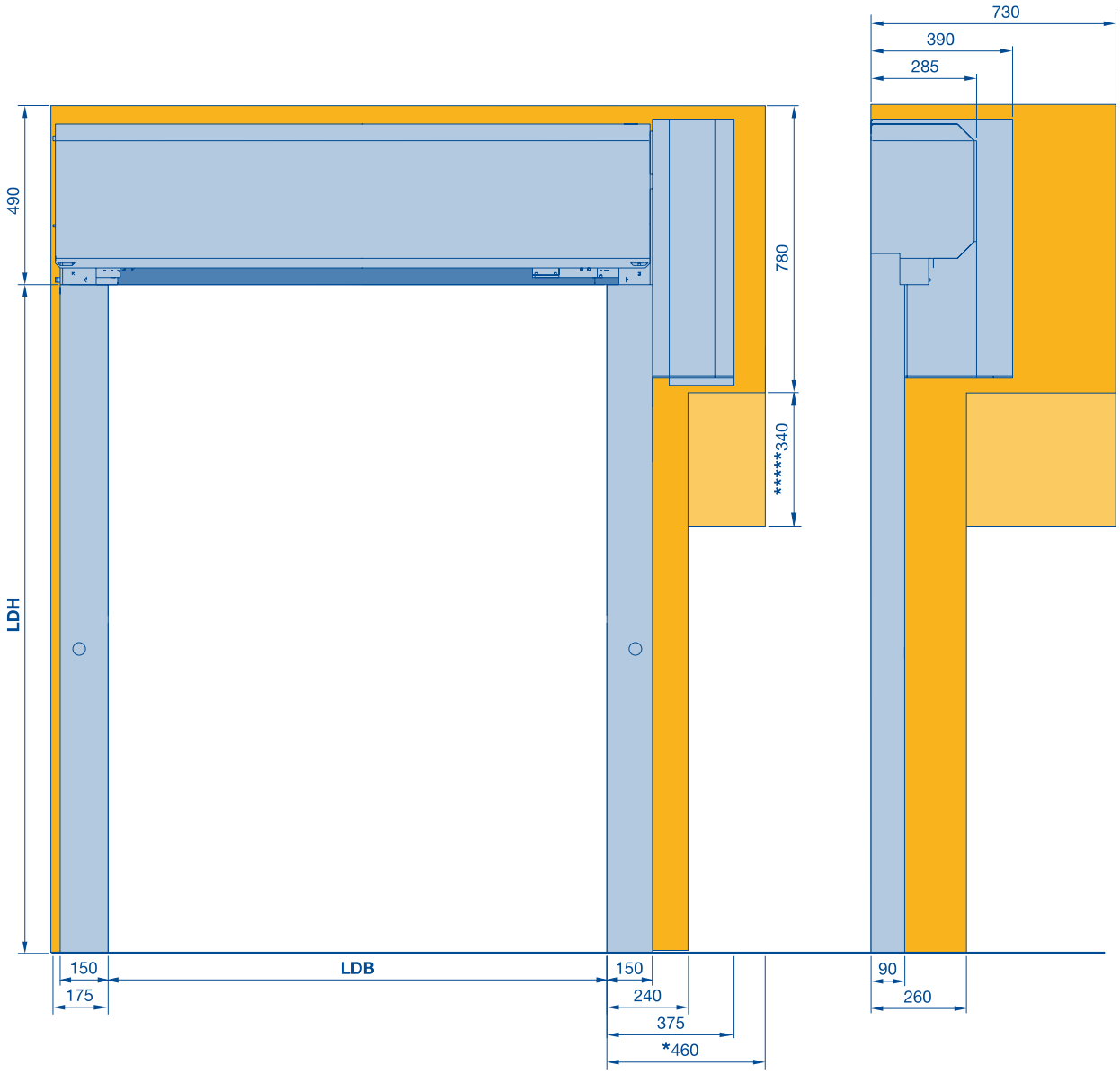

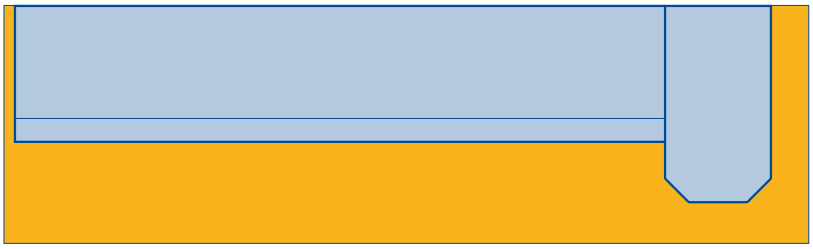

* Space required to dismantle the operator
***** For emergency crank handle

LDH Clear passage height
LDB Clear passage width

Vertical High-Speed Doors V 5015 SEL

Full cladding, chamfered

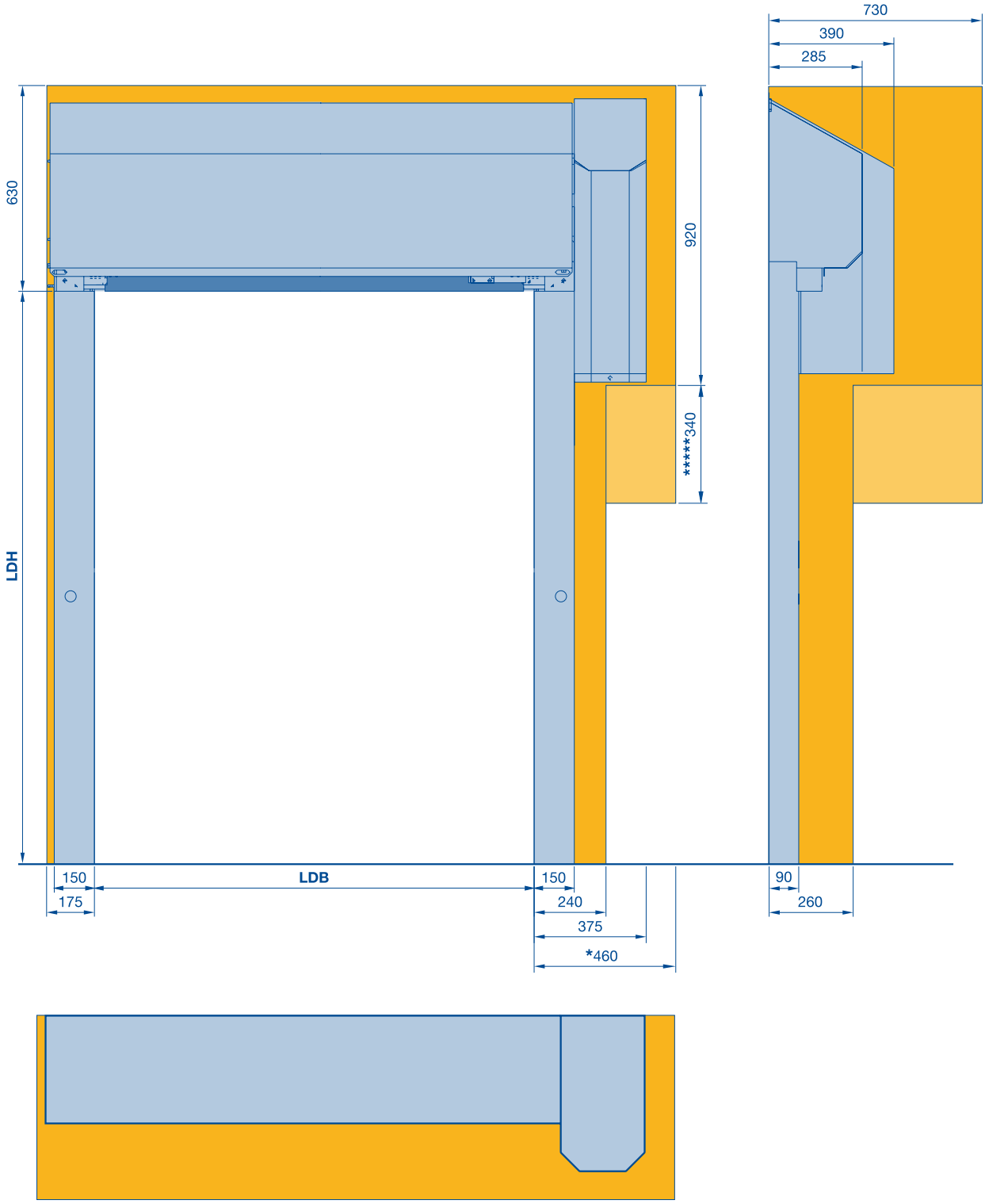

* Space required to dismantle the operator
***** For emergency crank handle

LDH Clear passage height
LDB Clear passage width

Vertical High-Speed Doors V 5030 SEL

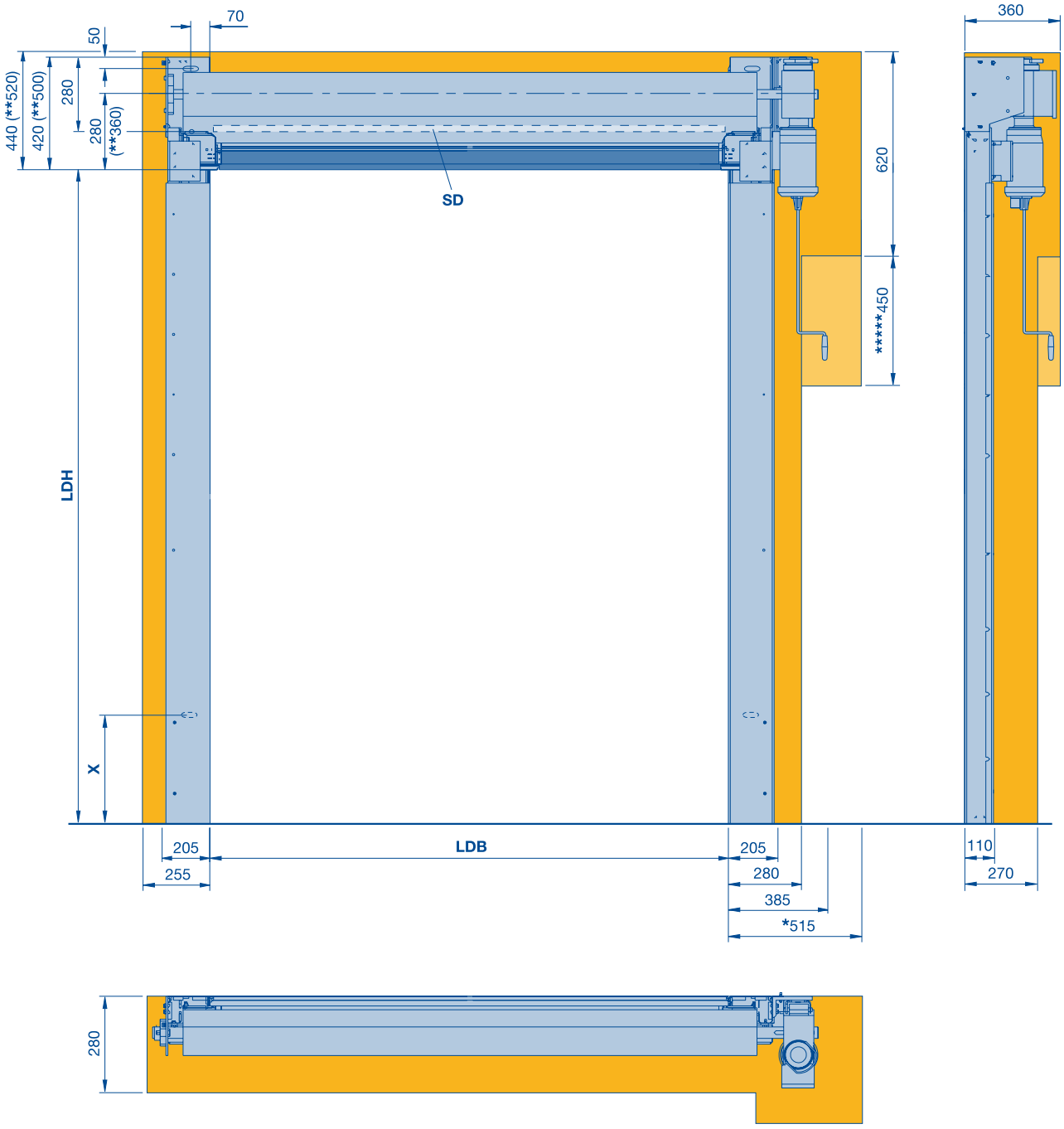

*	Space required to dismantle the operator	**X**	Order-related	**LDB**	Clear passage width
**	With aluminium bottom part	**LDH**	Clear passage height	**SD**	Lintel seal = LDH + 130
*****	For emergency crank handle				

Vertical High-Speed Doors V 5030 SEL

Full cladding, straight

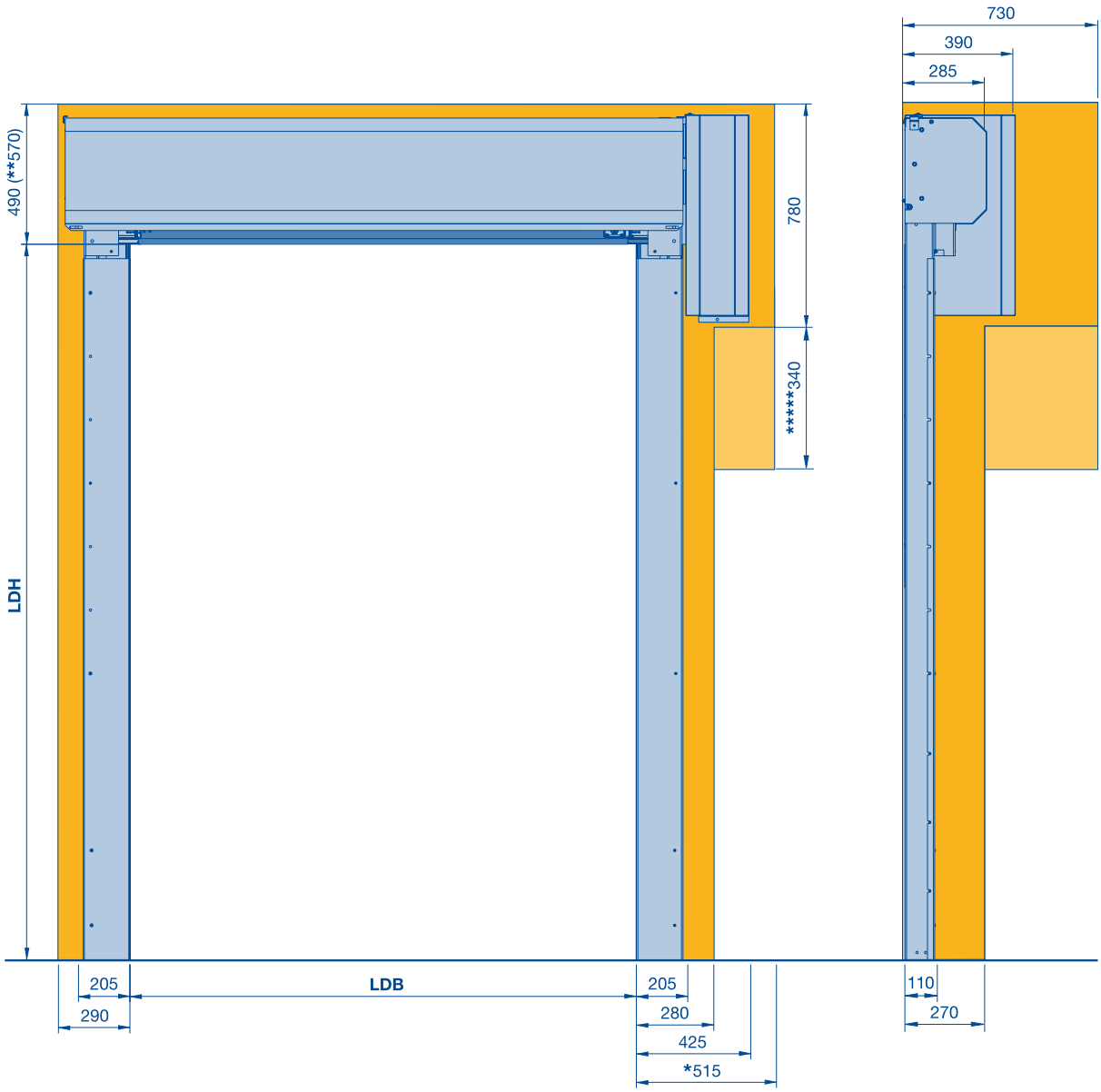

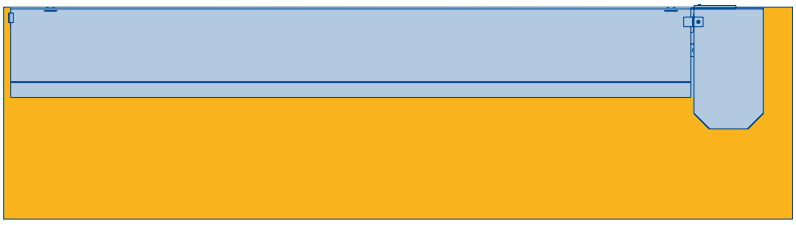

* Space required to dismantle the operator
** With aluminium bottom part
***** For emergency crank handle

LDH Clear passage height
LDB Clear passage width

Vertical High-Speed Doors V 5030 SEL

Full cladding, chamfered

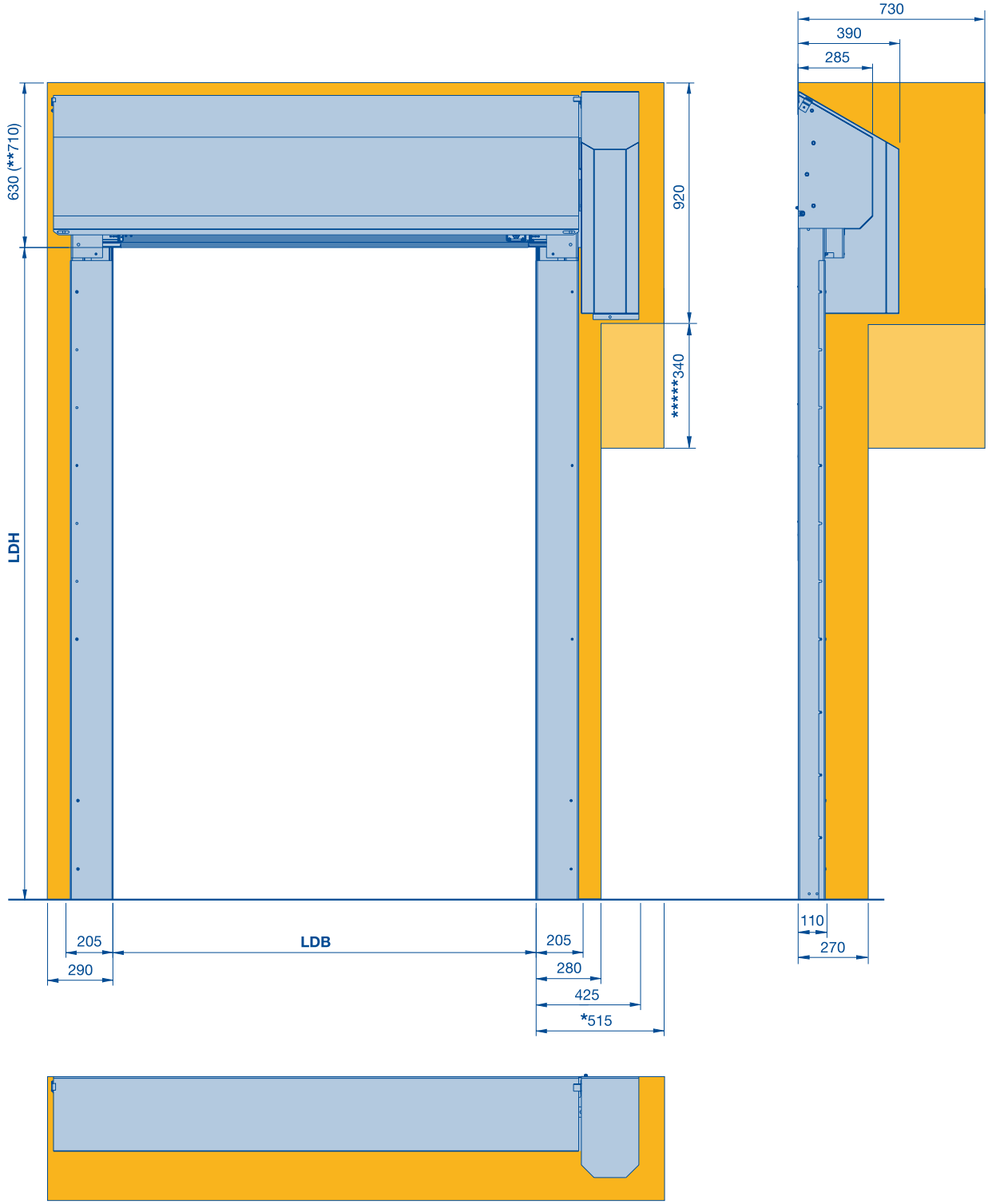

* Space required to dismantle the operator
** With aluminium bottom part
***** For emergency crank handle

LDH Clear passage height
LDB Clear passage width

Flexible External Doors

Technical data

			V 6030 SEL	V 6020 TR L	V 10008
Use	Internal door		●	●	●
	External door		●	●	●
Speed	FU control	Opening speed approx. m/sec.	2.0 – 3.0	1.5 – 2.0	0.8 – 1.5
		Closing speed approx. m/sec.	0.8	0.5	0.4
Safety equipment	DIN EN 13241		●	●	●
Resistance to wind load	DIN EN 12424		Class 2	Class 2	Class 3
Curtain stabilisation/WS	Alu/spring steel		–/●	–/●	–/●
Shutter sizes	Max. width LDB		5000	6000	10000
	Max. height LDH		6000	7000	6250
Fitting dimensions (space requirement) (See also the Technical Manual)	Operator side	LDB + mm (with cladding)	460 (505)	420 (470)	545 (580)
	Bearing side	LDB + mm (with cladding)	335 (355)	300 (300)	390 (390)
	Lintel	LDH + mm (with curtain fixing)	540 (615)	680 (760)	– (745)
		LDH + mm, straight cladding	590	720	–
		LDH + mm cladding 30° (5°)	730	800	(840)
	FU control in plastic cabinet	(W × H × D)	200 × 400 × 200	200 × 400 × 200	–
	FU control in steel cabinet	(W × H × D) (Stainless steel 1.4301)	400 × 600 × 200	400 × 600 × 200	400 × 600 × 200
Anti-Crash/crash-protection	With automatic/manual start-up		Crash-protection	–	–
Door construction	Self-supporting		●	●	–
	Fabric/transparent	1.5/2.0 mm	●	–	●
	Transp./fabric/transp.	4.0 (< 25 mm²) / 2.4/4.0 mm	–/–	●/○	–/–
Curtain/door leaf tension			●	●	●
Material/surface guide	Galvanized steel		●	●	●
	Galvanized steel, coated, in colours based on RAL		○	○	○
	Polished stainless steel V2A		○	○	–
Shaft/operator cover	Straight		○	○	–
	30° chamfered (5°)		○	○	(○)
Operator and control	FU control		●	●	●
	Connecting voltage (1-phase)		1-230 V, N, PE	1-230 V, N, PE	–
	Connecting voltage (3-phase)		3-400 V, N, PE	3-400 V, N, PE	3-400 V, N, PE
	Open-Stop-Close button		●	●	●
	FU control, main switch all-pole switch off, 1-phase/3-phase		○/●	○/●	–/●
	Fuse protection		16 A, K-characteristic	16 A, K-characteristic	16 A, K-characteristic
	Protection category	Operator, control	IP 54	IP 54	IP 54
	Emergency-off button		○	○	○
	Closing edge safety device	With energy chain	–	–	●
	Monitoring of the closing zone	Safety light grille IP 67	●	●	–
	External route monitoring	Photocell (internal)	○	○	(●)
		Light grille	○	○	○
	Door area monitoring	Radar presence detector	○	○	○
		Induction loop	○	○	○
	Hold-open phase in sec.		1-200	1-200	1-200
	Electronic limit switch DES		●	●	●
Emergency opening	Crank handle		●	●	–
	Emergency hand chain		○	○	●
	Counter weight/springs		○/–	–/–	–/–
	FU control with UPS 230 V (1-phase)		○	○	–
Volt-free contacts			○	○	○
Impulse generator			○	○	○
Safety devices			○	○	○

● Standard
○ Optional

WS Wind lock

Vertical High-Speed Doors V 6030 SEL

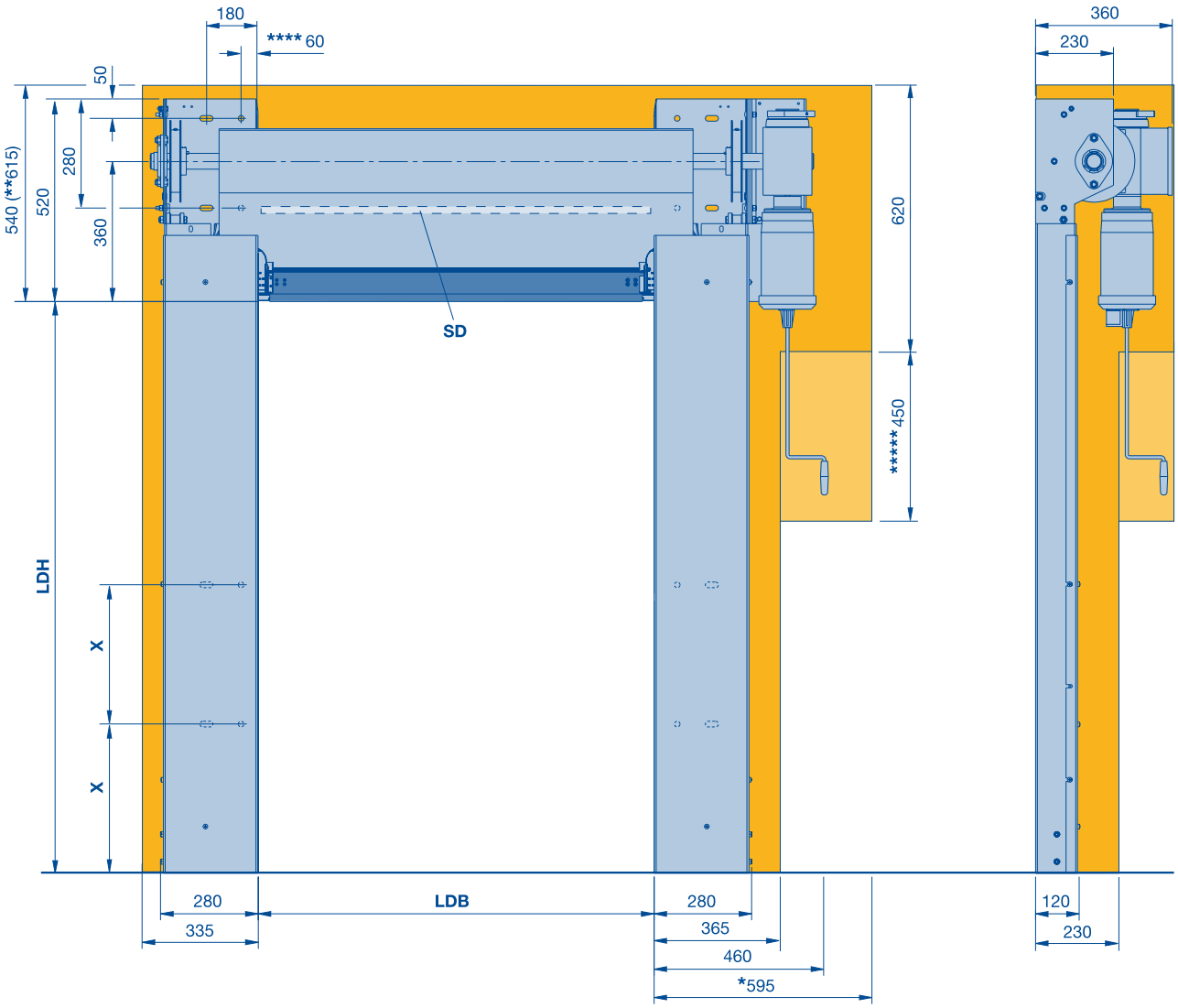

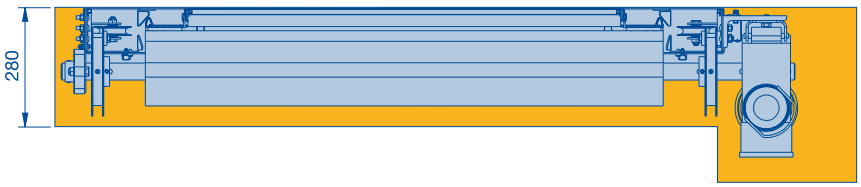

* Space required to dismantle the operator
** With curtain fixing
**** Only if fitted to steel
***** For emergency crank handle

X Order-related
LDH Clear passage height
LDB Clear passage width
SD Lintel seal = LDH + 270

Vertical High-Speed Doors V 6030 SEL

Full cladding, straight

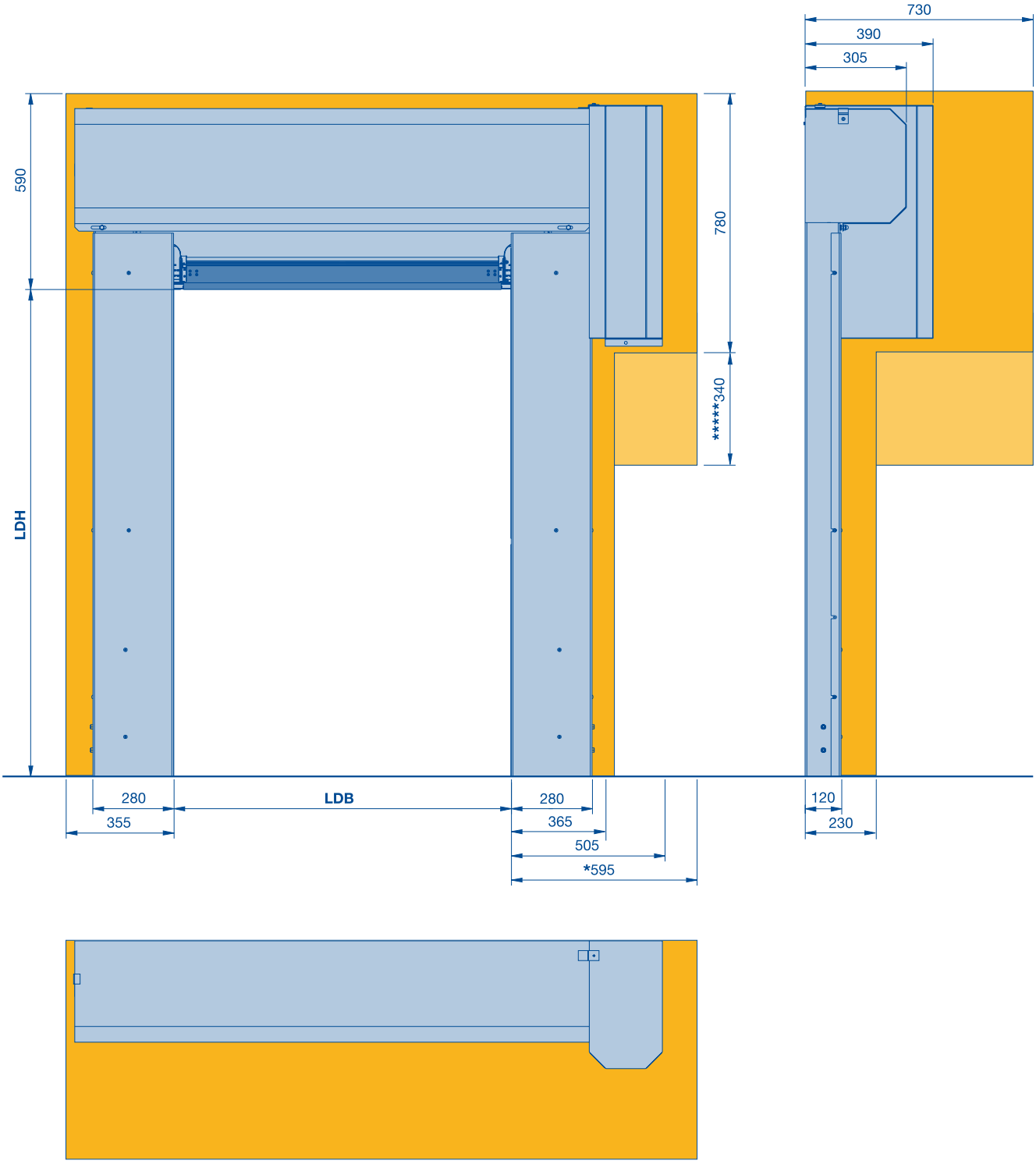

* Space required to dismantle the operator
***** For emergency crank handle

LDH Clear passage height
LDB Clear passage width

Vertical High-Speed Doors V 6030 SEL

Full cladding, chamfered

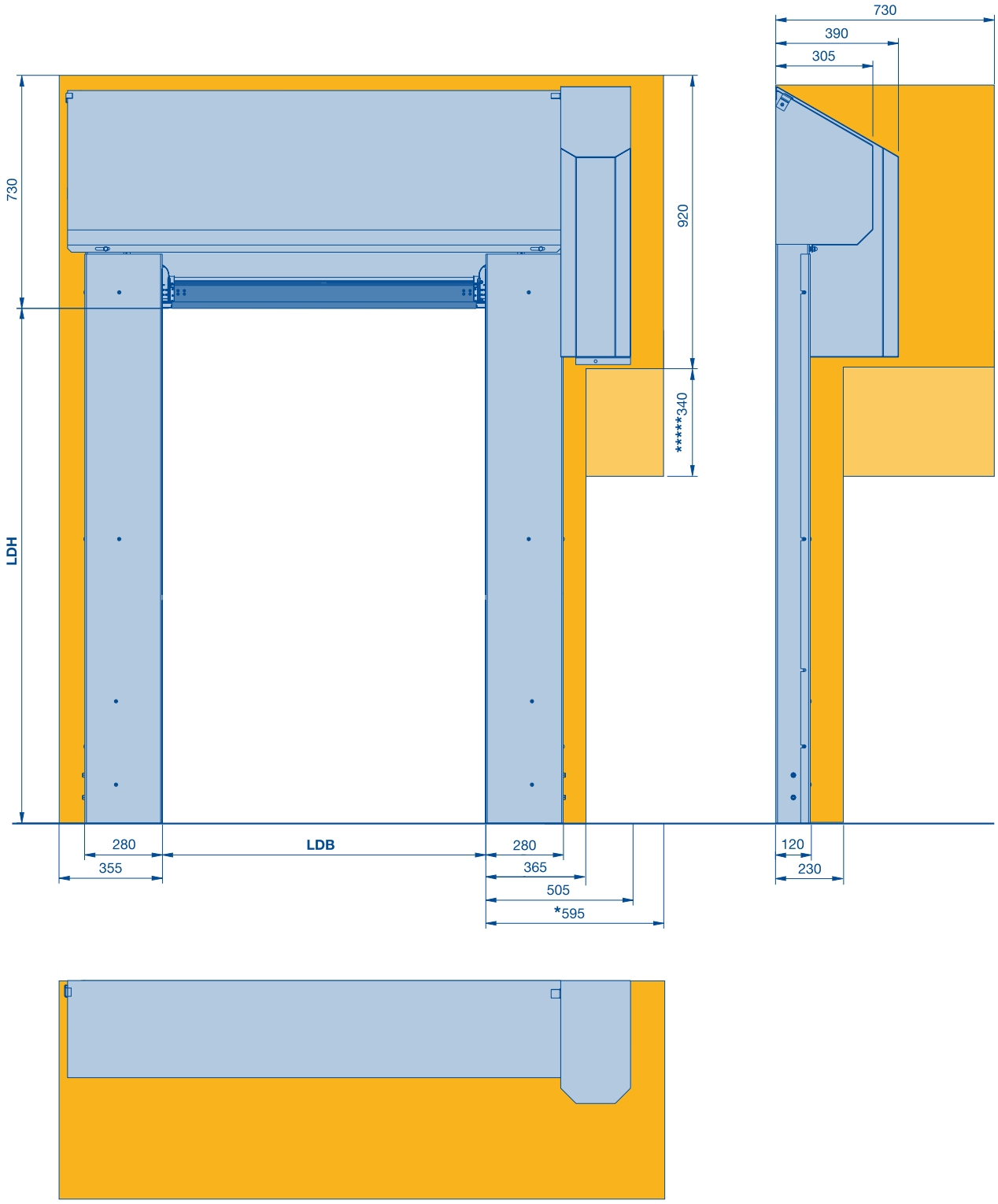

* Space required to dismantle the operator
***** For emergency crank handle

LDH Clear passage height
LDB Clear passage width

Vertical High-Speed Doors V 6020 TR L

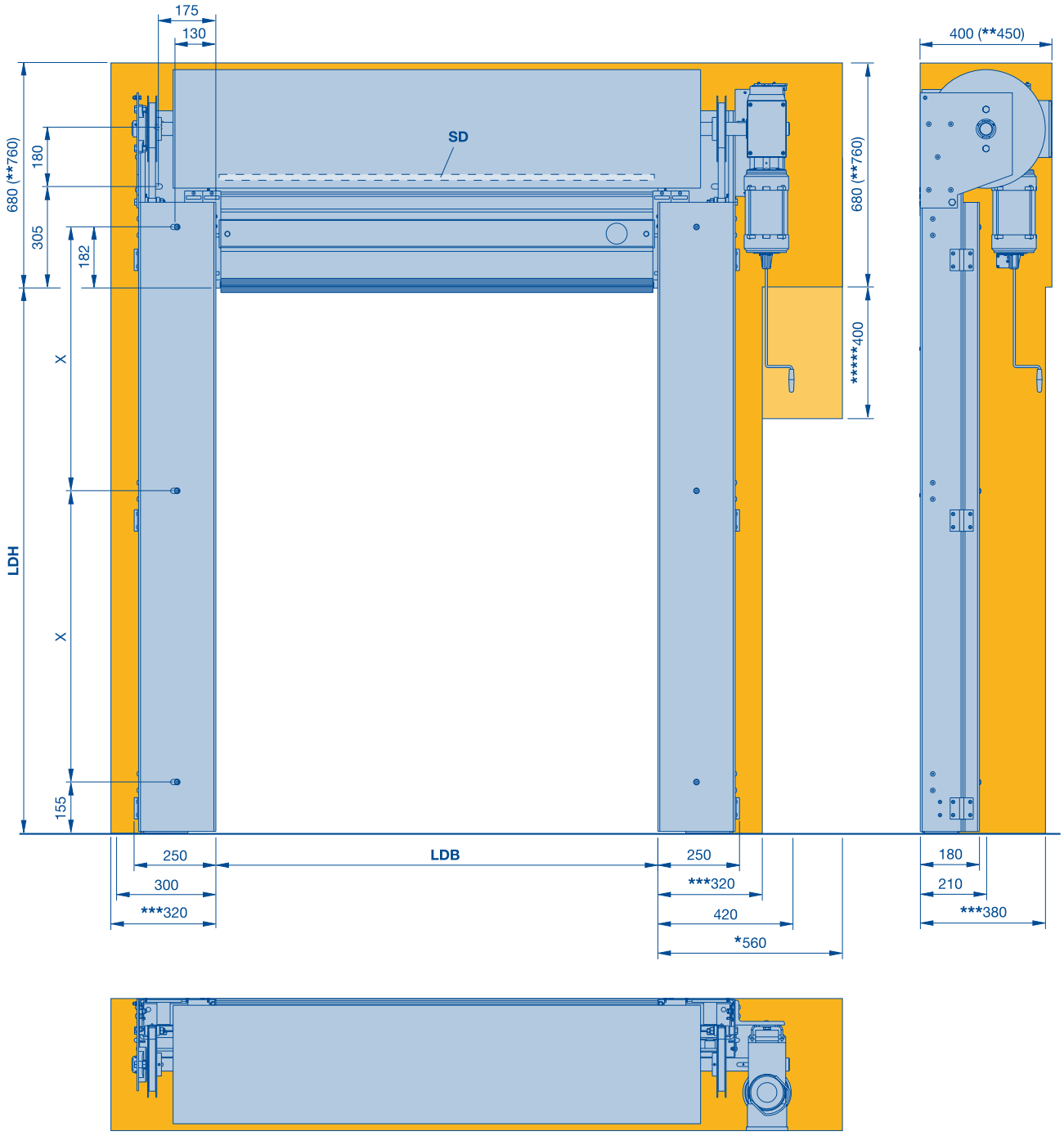

*	Space required to dismantle the operator
**	Space requirement for fitting curtain fixing
***	Space requirement for swivelling range cover
*****	For emergency crank handle

X	Order-related
LDH	Clear passage height
LDB	Clear passage width
SD	Lintel seal = LDH + 320

Vertical High-Speed Doors V 6020 TR L

Full cladding, straight

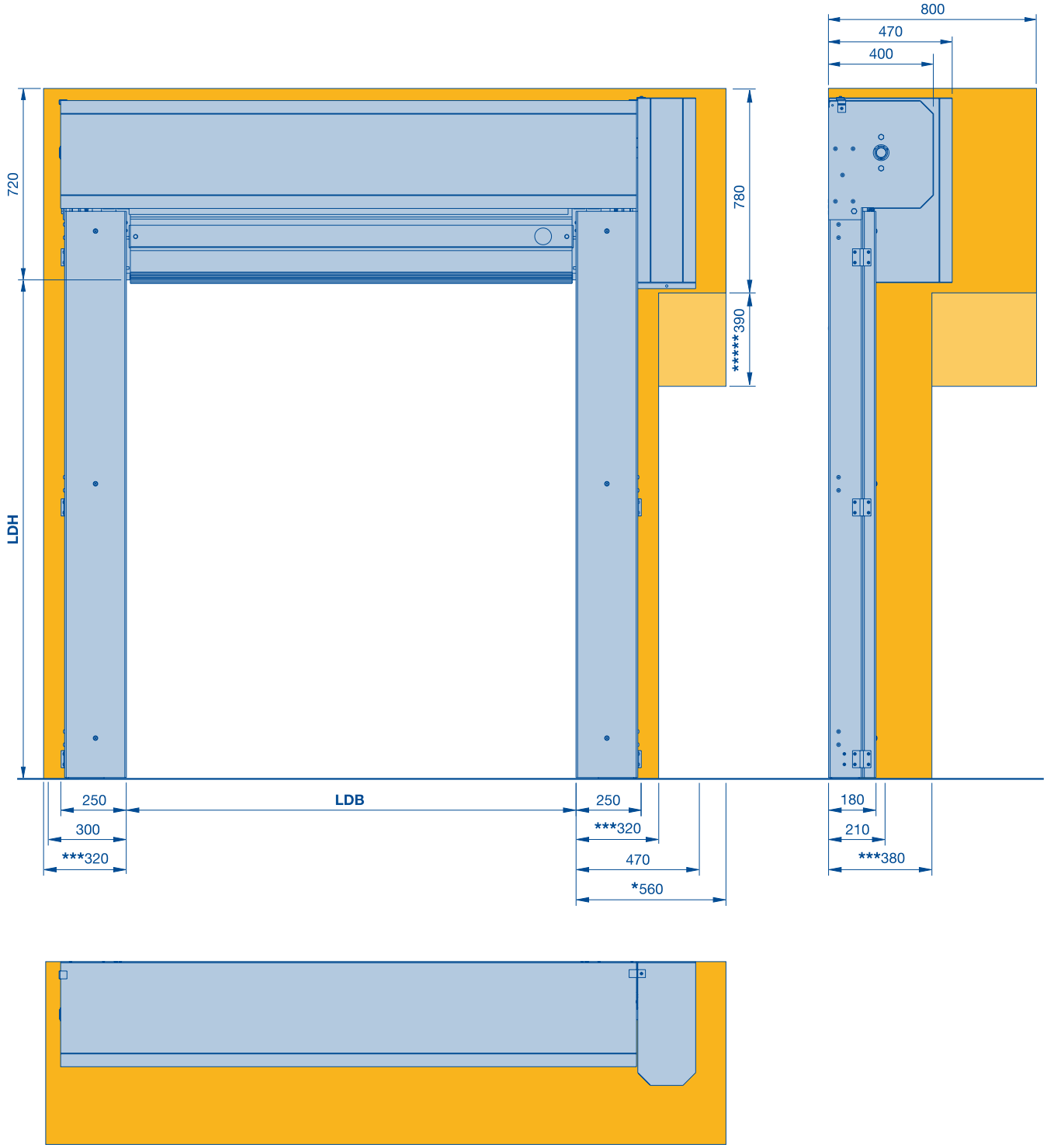

* Space required to dismantle the operator
*** Space requirement for swivelling range cover
***** For emergency crank handle

LDH Clear passage height
LDB Clear passage width

Vertical High-Speed Doors V 6020 TR L

Full cladding, chamfered

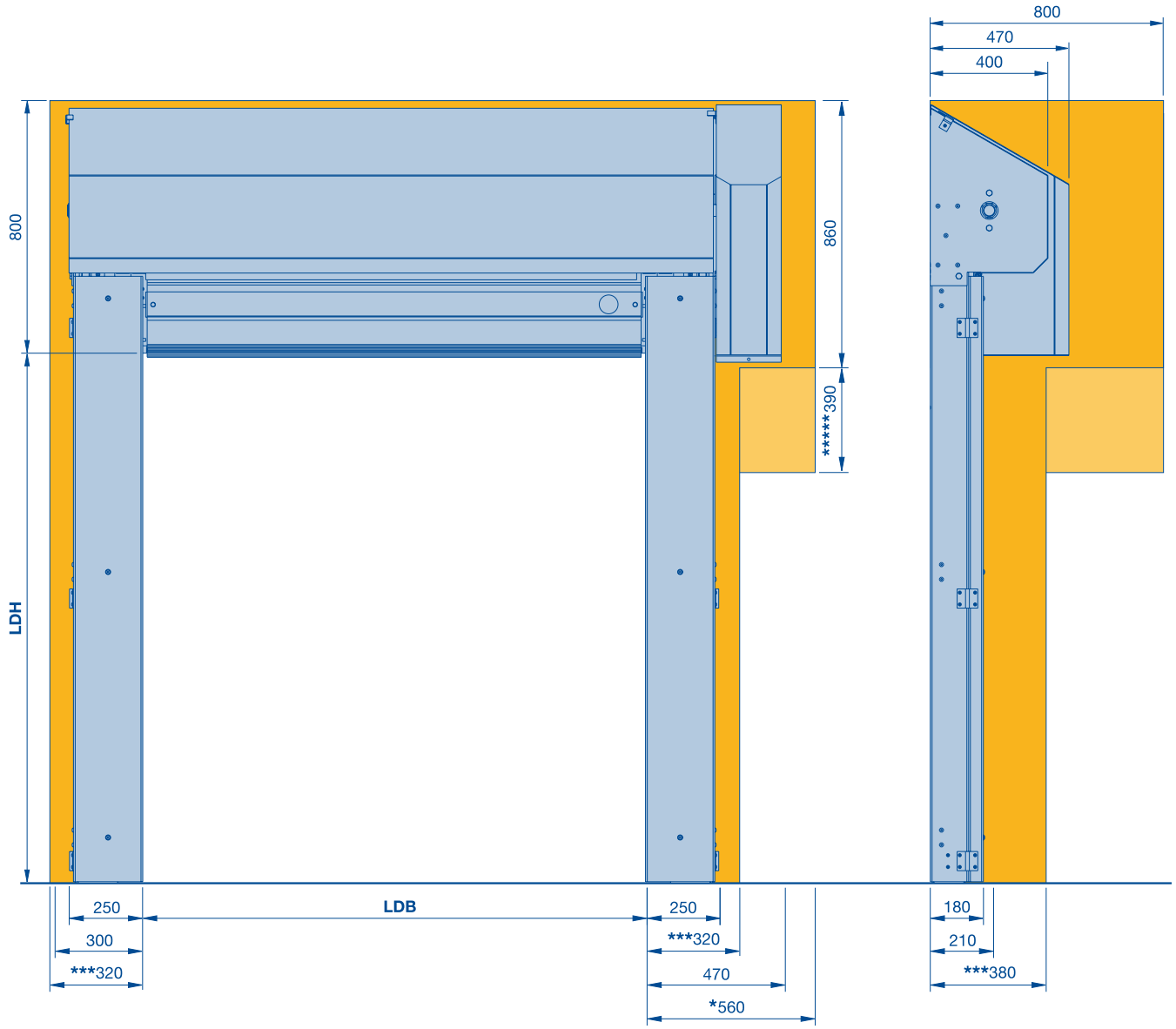

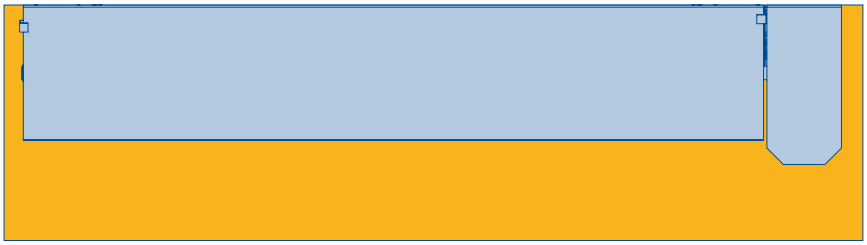

* Space required to dismantle the operator
*** Space requirement for swivelling range cover
***** For emergency crank handle

LDH Clear passage height
LDB Clear passage width

Vertical High-Speed Doors V 10008

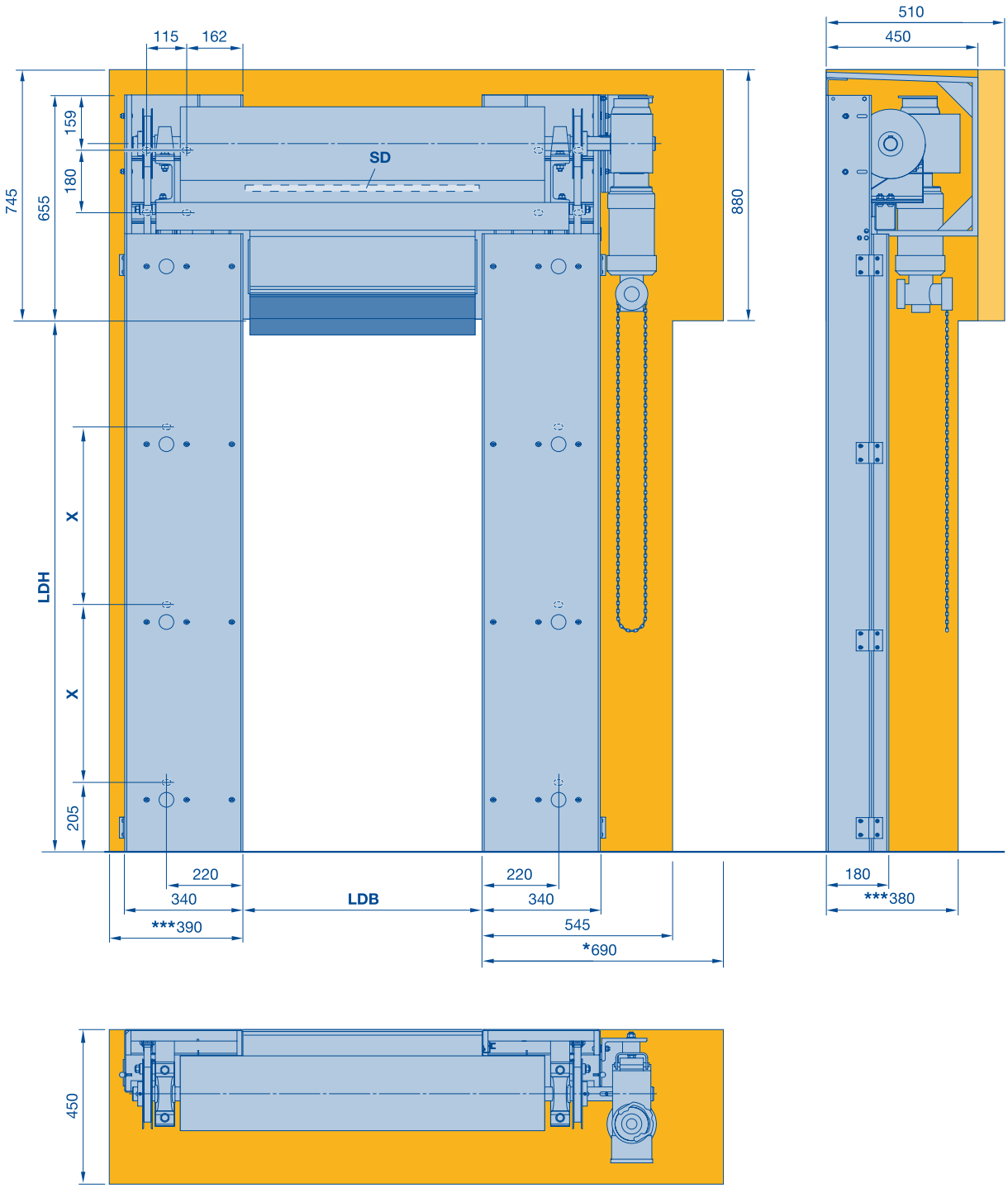

*	Space required to dismantle the operator	**LDH**	Clear passage height
***	Space requirement for swivelling range cover	**LDB**	Clear passage width
X	Order-related	**SD**	Lintel seal = LDH + 345

Vertical High-Speed Doors V 10008

Full cladding

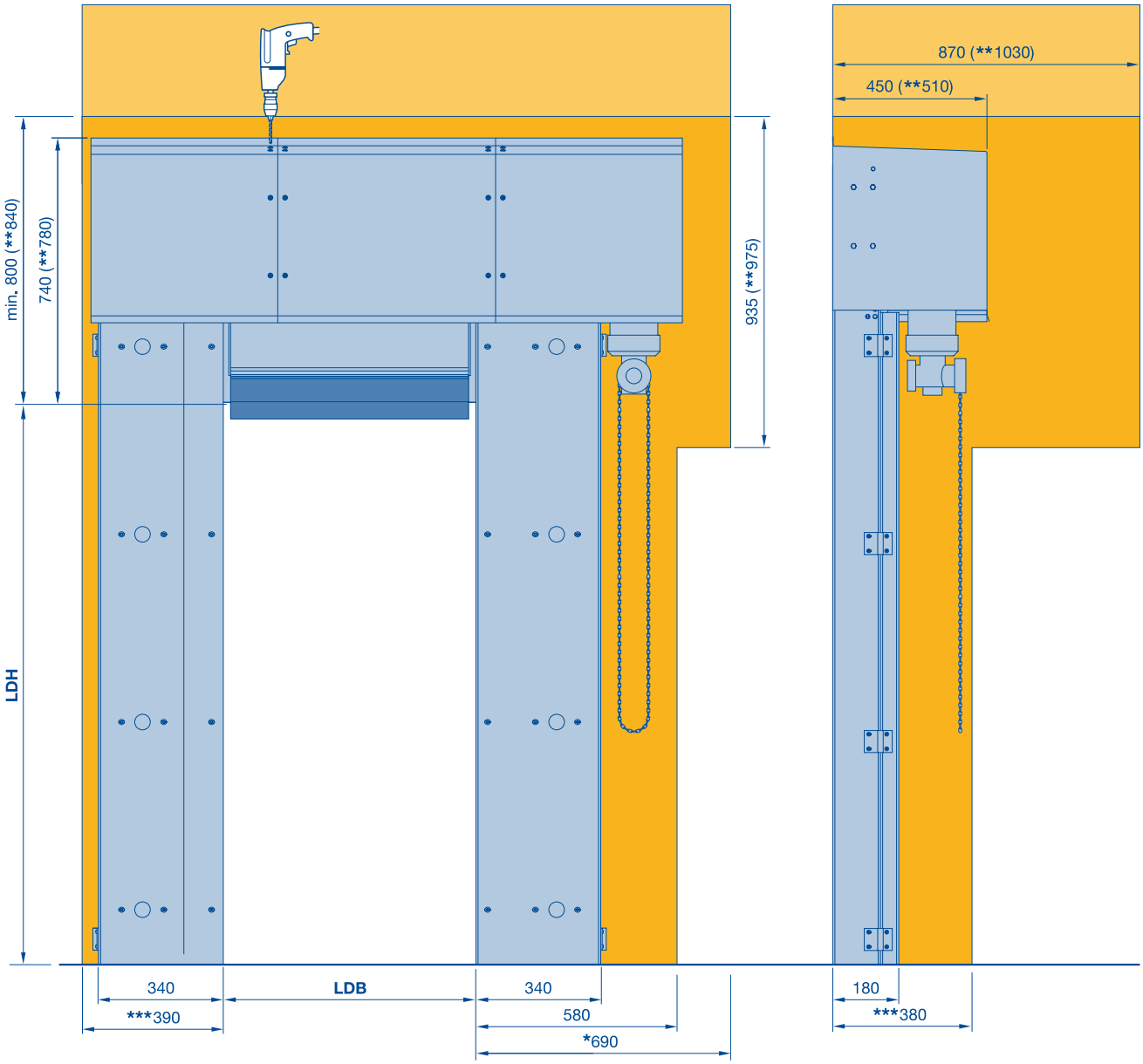

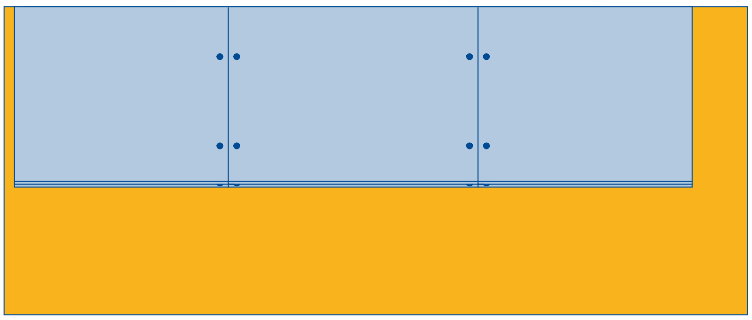

* Space required to dismantle the operator
** LB > 7300 mm or LDH > 6500 mm
*** Space requirement for swivelling range cover

LDH Clear passage height
LDB Clear passage width

Rolling Shutter and Vertical High-Speed Door

Door combination

Rolling shutter Decotherm (HR 116, HR 120) with direct drive operator and ZAK system, vertical high-speed door V 6030 SEL

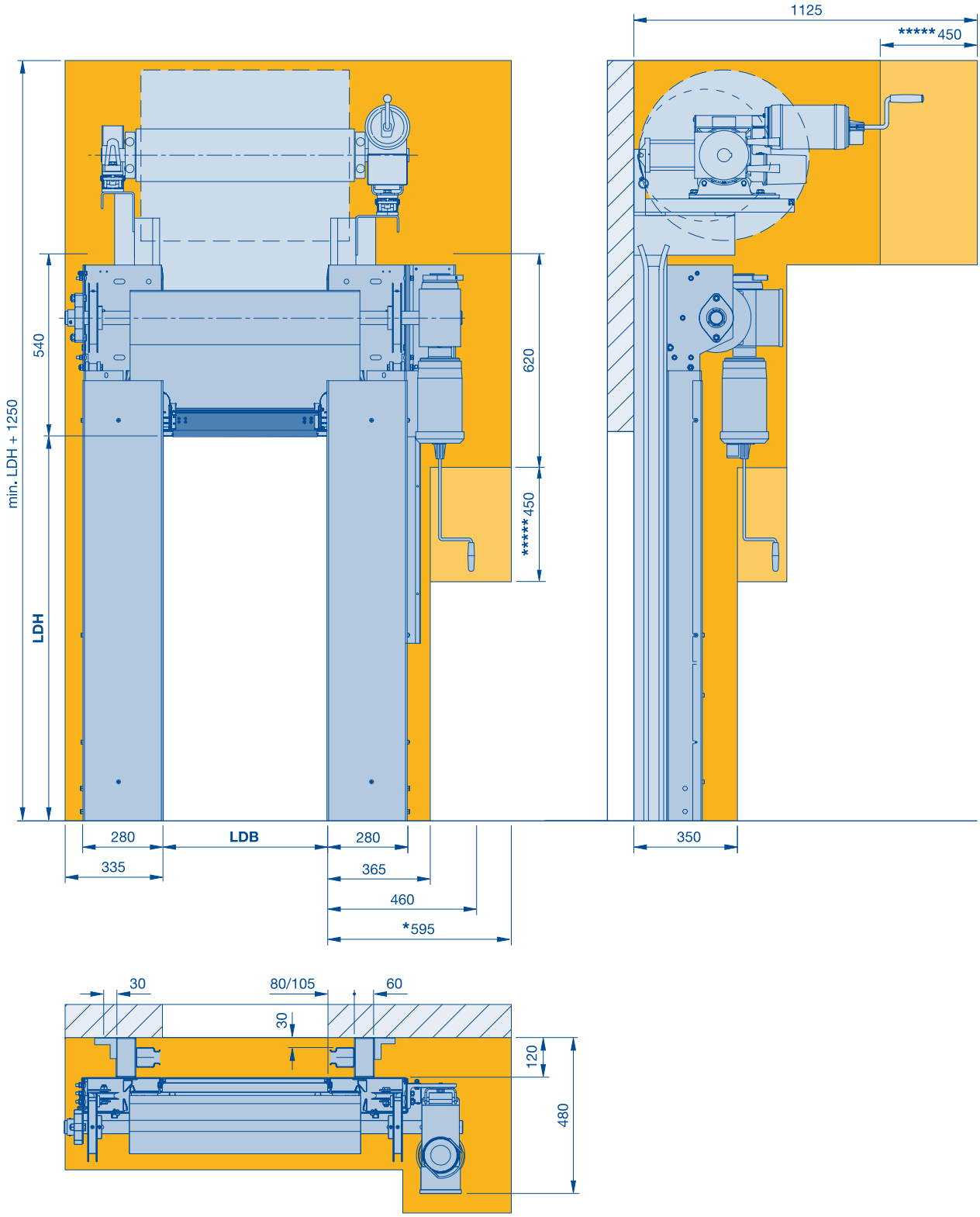

* Space required to dismantle the operator
***** For emergency crank handle

LDH Clear passage height
LDB Clear passage width

Cold Store and Deep Freeze Doors

Technical data

			ISO SPEED COLD	V 4015 ISO L
Use	Internal door		●	●
	External door		●	–
Speed	FU control	Opening speed approx. m/sec.	2.0	1.5
		Closing speed approx. m/sec.	0.5	0.5
Safety equipment	DIN EN 13241		●	●
Resistance to wind load	DIN EN 12424		Class 3	Class 0
Curtain stabilisation/WS	Alu/spring steel		–/–	●/–
Shutter sizes	Max. width LDB		5000	4000
	Max. height LDH		5000	4500
Fitting dimensions (space requirement) (See also the Technical Manual)	Operator side	LDB + mm (with cladding)	510 (–)	325 (360)
	Bearing side	LDB + mm (with cladding/counter weight)	375 (–/375)	295 (325/–)
	Lintel	LDH + mm	1)	630
		LDH + mm, straight cladding	–	–
		LDH + mm cladding 30° (5°)	– (–)	– (720)
	FU control in plastic cabinet	(W × H × D)	–	200 × 400 × 200
	FU control in steel cabinet	(W × H × D) (Stainless steel 1.4301)	400 × 600 × 200	400 × 600 × 200
Anti-Crash/crash-protection	With automatic/manual start-up		–	–
Door construction	Self-supporting		●	–
Curtain/door leaf	Door leaf	80 mm, PU-foamed	●	–
	Curtain	20 mm, PO foam	–	●
Curtain/door leaf tension			–	–
Material/surface guide	Galvanized steel		●	●
	Galvanized steel, coated, in colours based on RAL		○	○
	Polished stainless steel V2A		○	○
Shaft/operator cover	Straight		–	–
	30° chamfered (5°)		–	(○)
Operator and control	FU control		●	●
	Connecting voltage (1-phase)		–	1-230 V, N, PE
	Connecting voltage (3-phase)		3-400 V, N, PE	–
	Open-Stop-Close button		●	●
	FU control, main switch all-pole switch off, 1-phase/3-phase		–/●	○/–
	Fuse protection		20 A, K-characteristic	16 A, K-characteristic
	Protection category	Operator, control	IP 54	IP 54
	Emergency-off button		○	○
	Closing edge safety device	With energy chain	●	–
	Monitoring of the closing zone	Safety light grille IP 67	–	●
	External route monitoring	Photocell (internal)	(●)	–
		Light grille	○	○
	Door area monitoring	Radar presence detector	○	○
		Induction loop	○	○
	Hold-open phase in sec.		1-200	1-200
	Electronic limit switch DES		●	●
Emergency opening	Crank handle		●	●
	Emergency hand chain		○	–
	Counter weight/springs		●/–	–/–
	FU control with UPS 230 V (1-phase)		–	○
Volt-free contacts			○	○
Impulse generator			○	○
Safety devices			○	○

● Standard
○ Optional

WS Wind lock
1) Track application N: LDH + 950 mm, track application V: LDH x 2 + 800 mm

Sectional Doors ISO SPEED COLD

H tracks

Door version with high-lift track application NH, H and HD

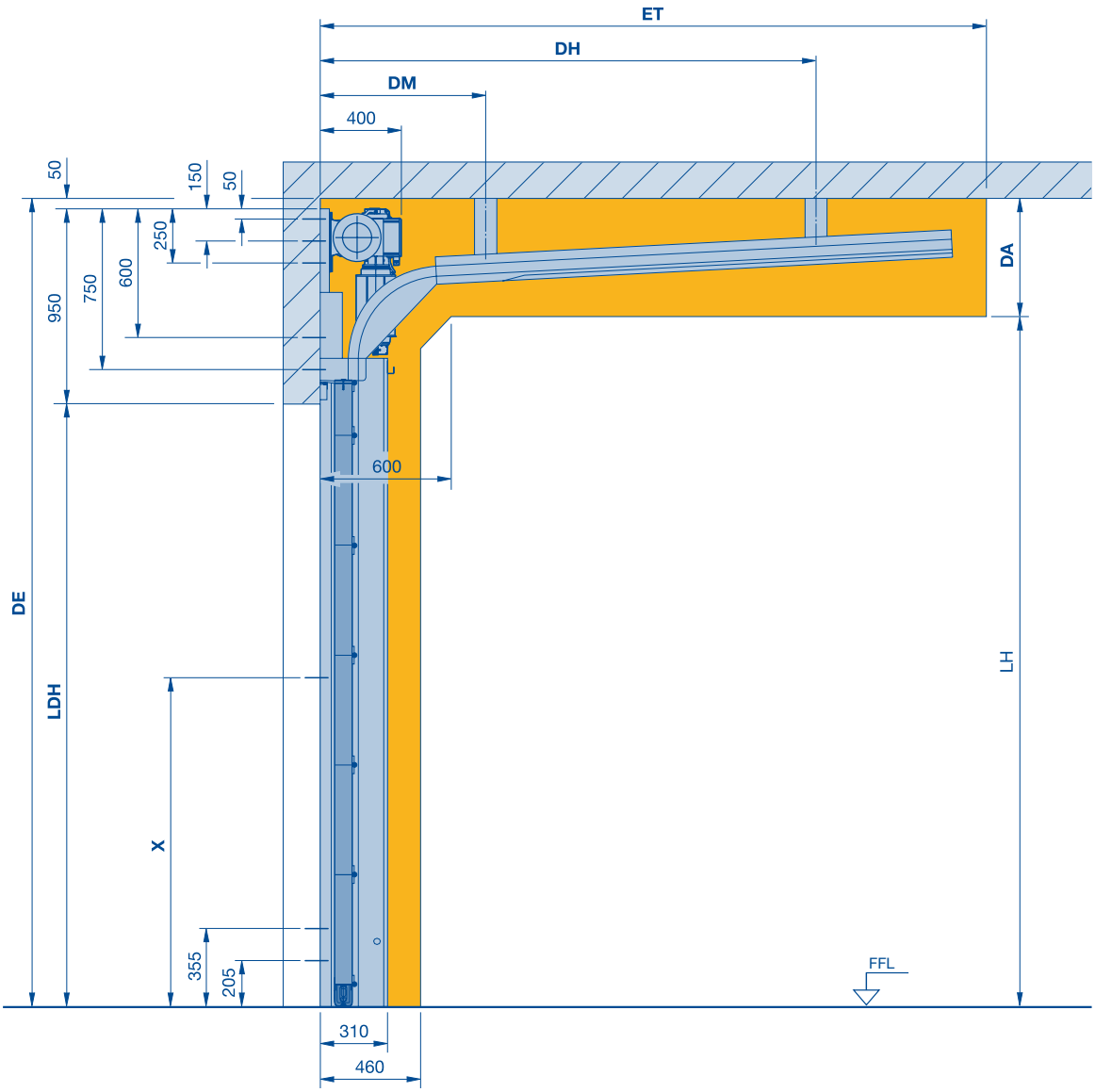

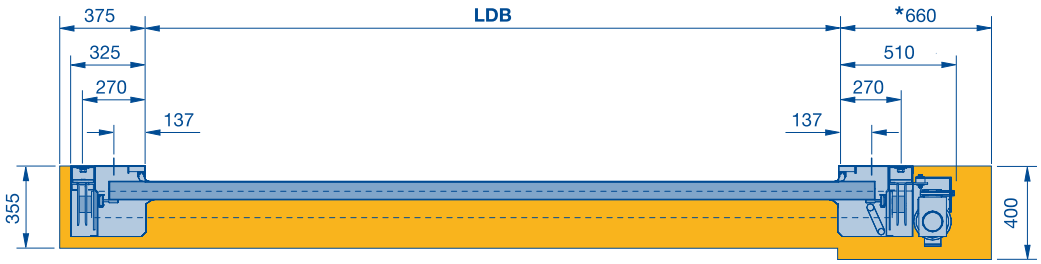

*	Space required to dismantle the operator
X	Order-related
LDH	Clear passage height
LDB	Clear passage width
ET	Distance back
DA	Distance to ceiling
DH	Rear ceiling anchor
DM	Centre ceiling anchor
EN	Ceiling height
LH	Track height
FFL	Finished floor level

Sectional Doors ISO SPEED COLD

Track application V

Door version with vertical track application and overhead operator (V)

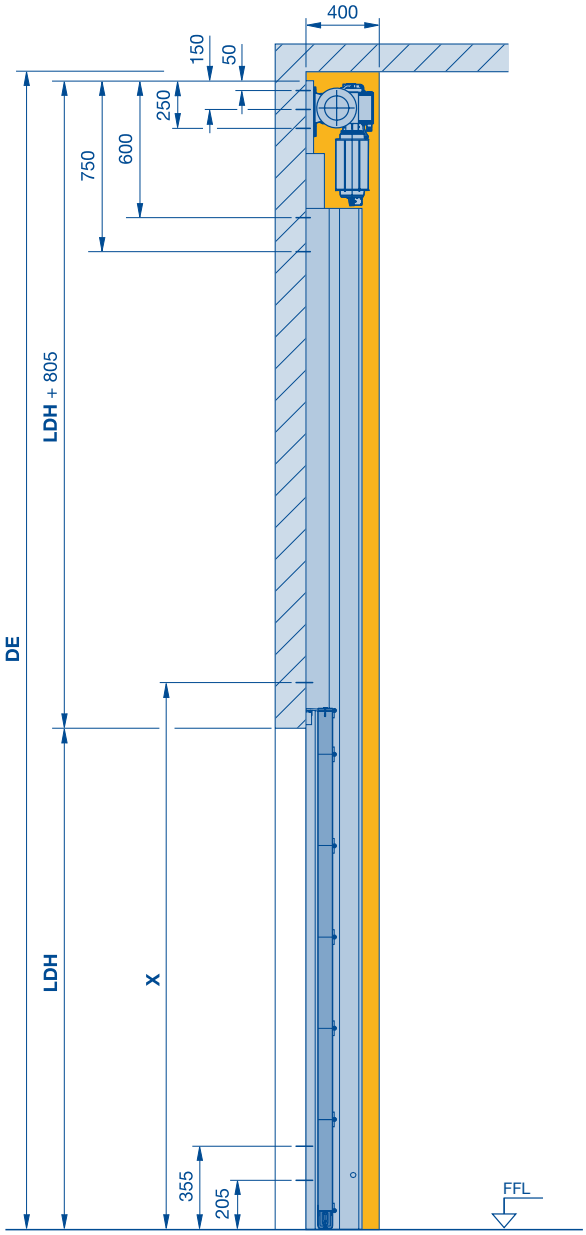

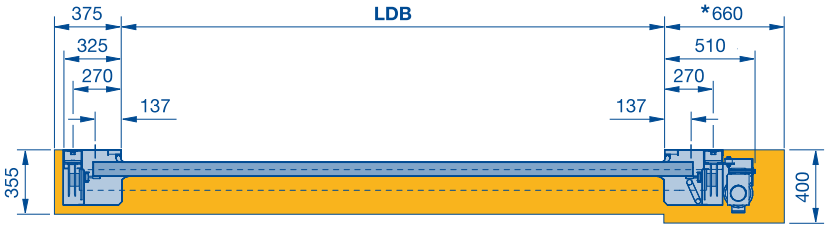

*	Space required to dismantle the operator
X	Order-related
LDH	Clear passage height
LDB	Clear passage width
DE	Min. ceiling height ≥ 2 x LDH + 850 mm
FFL	Finished floor level

Vertical High-Speed Doors V 4015 ISO

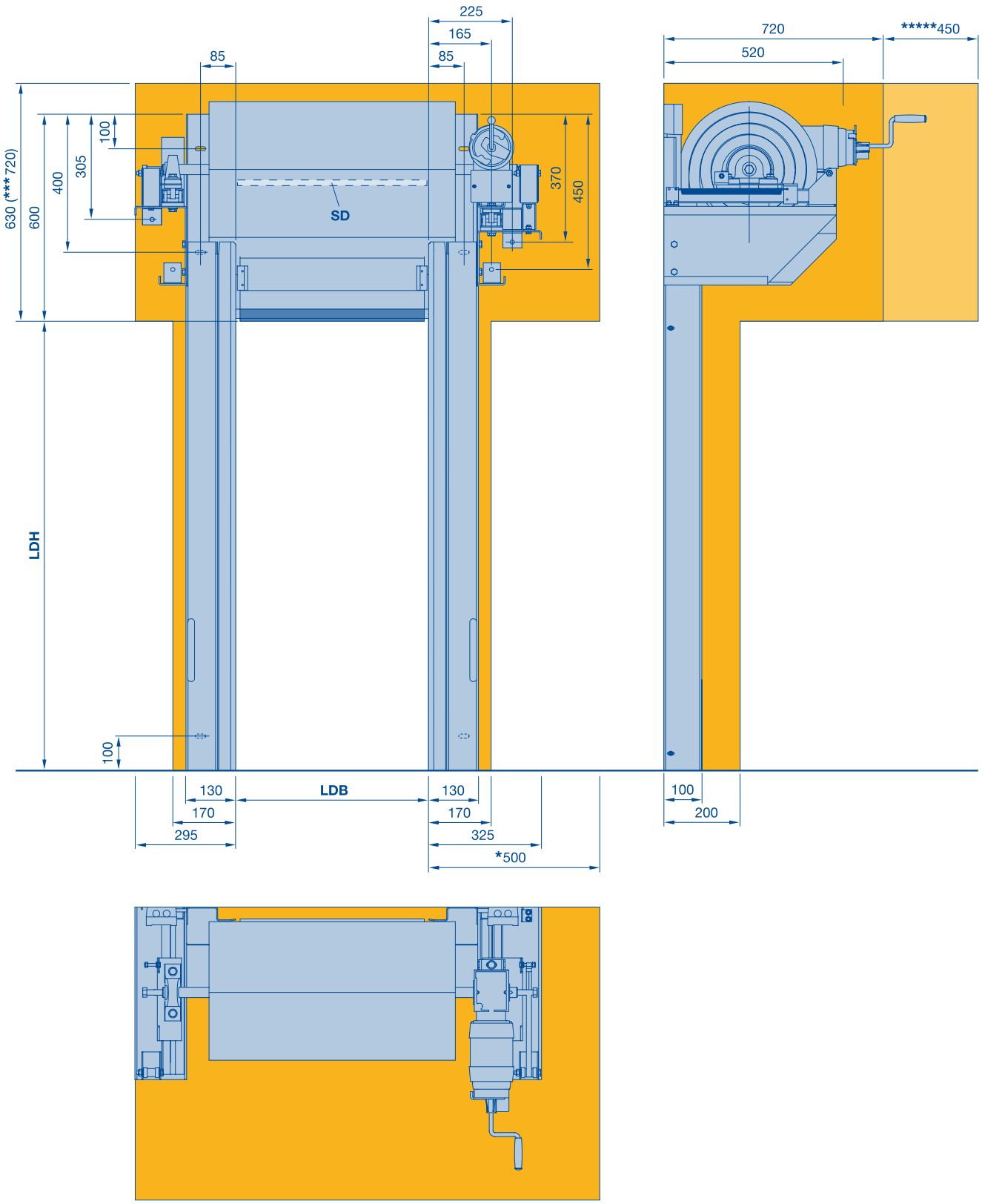

* Space required to dismantle the operator
*** Optional cladding 5°
***** For emergency crank handle

LDH Clear passage height
LDB Clear passage width
SD Lintel seal = LDH + 380

Special Doors

Technical Data

			V 3015 RW
Use	Internal door		●
	External door		–
Speed	FU control	Opening speed approx. m/sec.	1.5
		Closing speed approx. m/sec.	0.8
Safety equipment	DIN EN 13241		●
Resistance to wind load	DIN EN 12424		Class 0
Curtain stabilisation/WS	Alu/spring steel		●/–
Shutter sizes	Max. width LDB		3000
	Max. height LDH		3000
Fitting dimensions (space requirement) See also the Technical Manual	Operator side	LDB + mm (with cladding)	325 (355)
	Bearing side	LDB + mm (with cladding)	300 (300)
	Lintel	LDH + mm	440
		LDH + mm, straight cladding	490
		LDH + mm cladding 30° (5°)	670
	FU control in plastic cabinet	(W × H × D)	–
	FU control in steel cabinet	(W × H × D) (Stainless steel 1.4301)	300 × 400 × 150
Anti-Crash/crash-protection	With automatic/manual start-up		Anti-Crash
Door construction	Self-supporting		●
Curtain/door leaf	Fabric/transparent	1.5/2.0 mm	●
	Transparent	4.0 mm	–
Curtain/door leaf tension			–
Material/surface guide	Galvanized steel		●
	Galvanized steel, coated, in colours based on RAL		○
	Polished stainless steel V2A		○
Shaft/operator cover	Straight		○
	30° chamfered (5°)		○
Operator and control	WU control		–
	FU control		●
	Connecting voltage (1-phase)		1-230 V, N, PE
	Connecting voltage (3-phase)		–
	Open-Stop-Close button		●
	FU control, main switch all-pole switch off, 1-phase/3-phase		●/–
	Fuse protection		16 A, K-characteristic
	Protection category	Operator, control	IP 54
	Emergency-off button		●
	Closing edge safety device	With energy chain	With spiral cable
	Monitoring of the closing zone	Safety light grille IP 67	–
	External route monitoring	Photocell (internal)	(●)
		Light grille	○
	Door area monitoring	Radar presence detector	○
		Induction loop	○
	Hold-open phase in sec.		1-200
	Electronic limit switch DES		●
Emergency opening	Crank handle		–
	Emergency hand chain		–
	Counter weight/springs		●/–
	FU control with UPS 230 V (1-phase)		–
Volt-free contacts			○
Impulse generator			○
Safety devices			○

● Standard
○ Optional

WS Wind lock

V 2515 FOOD L	V 2012	V 1401 ATEX	V 3015 CLEAN	V 3009	H 3530
●	●	●	●	●	●
–	–	–	–	–	–
1.2	1.2	1.4	1.5	(AKE 0.8)	3.0
0.8	0.5	0.5	0.5	(AKE 0.8)	1.0
●	●	●	●	●	●
Class 0	Class 0	Class 0	Class 0	Class 0	Class 0
–/●	–/●	●/–	–/●	●/–	–/–
2500	2500	4000	2500	3000	3500
3000	2500	4000	3000	3000	3500
– (355)	– (345)	435 (475)	– (380)	310 (310)	– (355)
– (200)	– (180)	150 (150)	– (225)	150 (180)	– (355)
–	–	660	–	300	–
–	400	700	–	335	370
(480)	–	850	(550)	480	520
–	200 × 400 × 200	–	–	200 × 400 × 200	200 × 400 × 200
300 × 400 × 150 V2A	–	600 × 600 × 200	300 × 400 × 150	–	–
Anti-Crash	Anti-Crash	–	–	–	–
●	●	●	●	●	
●	●	●	–	●	●
–	–	–	●	–	–
–	–	–	–	–	●
–	●	●	●	●	●
–	○	○	○	○	○
●	–	○	○	○	○
–	●	○	–	○	●
(●)	–	○	(●)	○	○
–	–	–	–	●	–
●	●	●	●	○	●
1-230 V, N, PE	1-230 V, N, PE	1-230 V, N, PE	1-230 V, N, PE	1-230 V, N, PE	1-230 V, N, PE
–	–	–	–	–	–
●	●	●	●	●	●
●/–	–/–	●/–	○/–	○/–	○/–
16 A, K-characteristic	16 A, K-characteristic	16 A, K-characteristic	16 A, K-characteristic	10 A (16 A, K-characteristic/FU)	16 A, K-characteristic
IP 65	IP 54	IP 54	IP 54	IP 54	IP 54
○	○	○	○	○	○
–	–	●	●	●	●
●	–	–	–	–	–
○	–	(●)	(●)	(●)	(●)
○	●	–	○	○	○
○	○	○	○	○	○
○	○	○	○	○	○
1-200	1-200	1-200	1-200	1-200	1-200
●	●	–	●	●	●
–	–	●	●	●	–
–	–	–	–	–	–
–/–	●/–	–/–	–/–	–/–	–/●
○	–	–	○	○	○
○	○	○	○	○	○
○	○	○	○	○	○
○	○	○	○	○	○

Vertical High-Speed Doors V 3015 RW

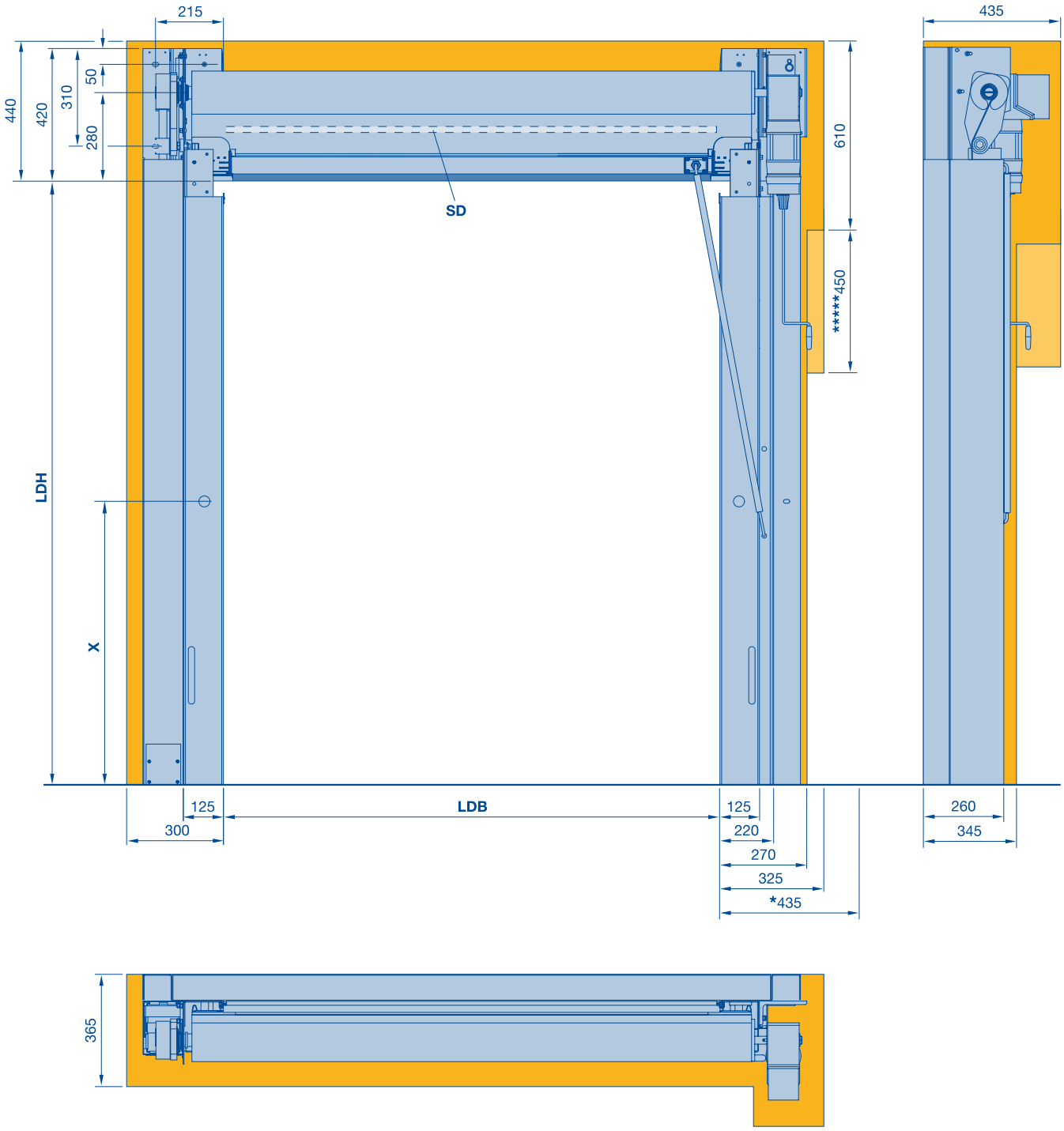

*	Space required to dismantle the operator	**LDH**	Clear passage height
*****	For emergency crank handle	**LDB**	Clear passage width
X	Order-related	**SD**	Lintel seal = LDH + 165

Vertical High-Speed Doors V 3015 RW

Full cladding, straight

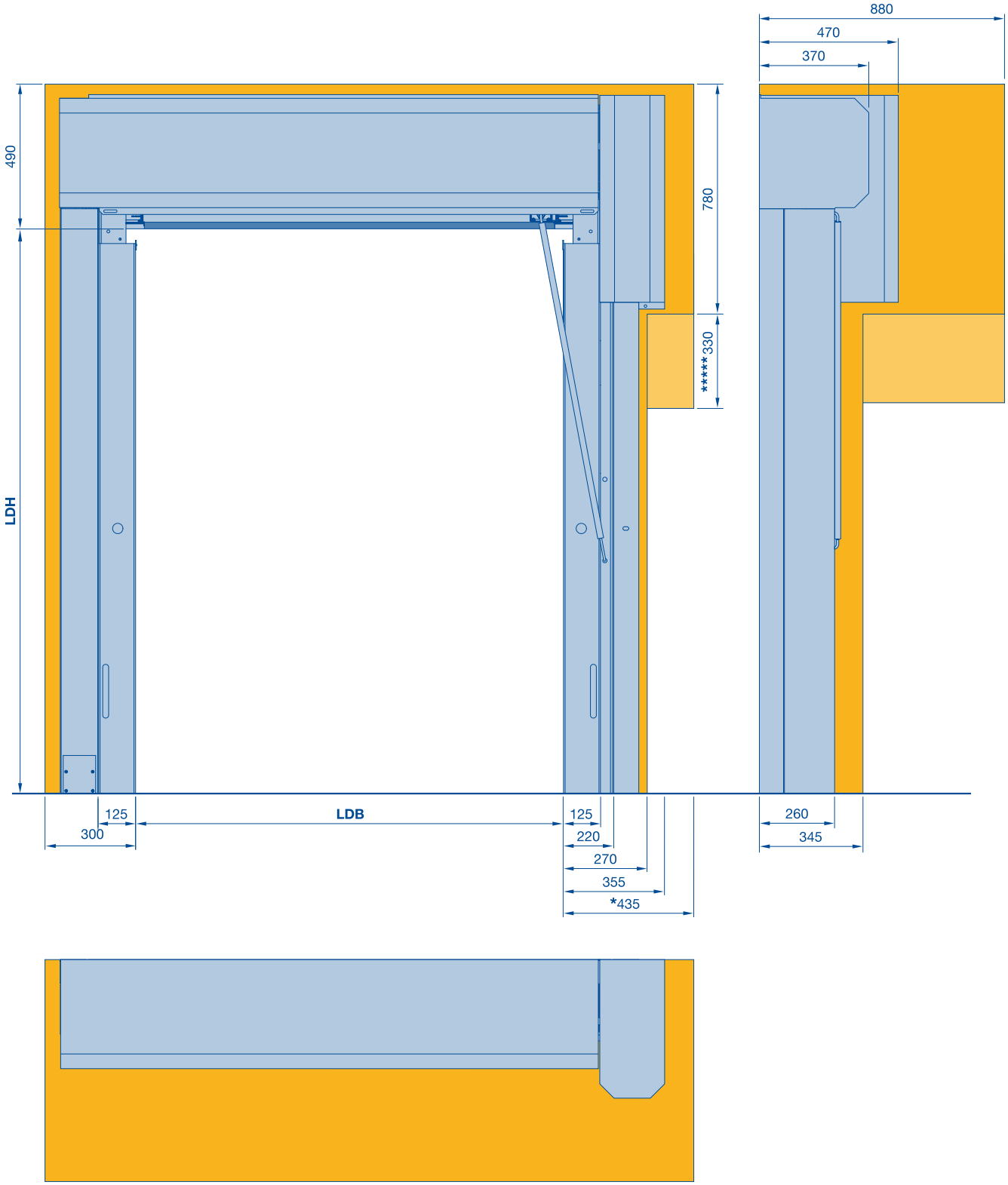

* Space required to dismantle the operator
***** For emergency crank handle

LDH Clear passage height
LDB Clear passage width

Vertical High-Speed Doors V 3015 RW

Full cladding, chamfered

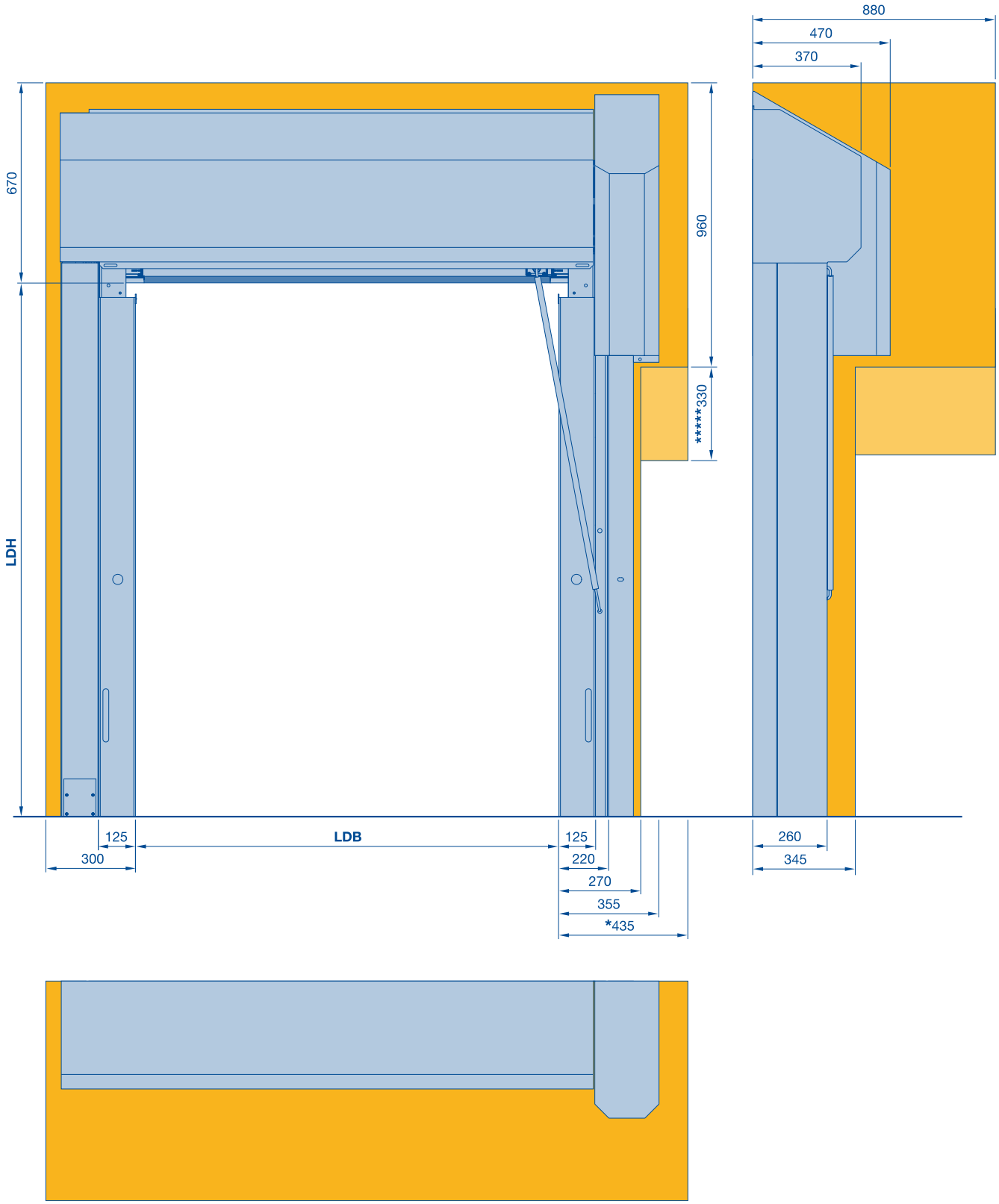

* Space required to dismantle the operator
***** For emergency crank handle

LDH Clear passage height
LDB Clear passage width

Vertical High-Speed Doors V 2515 FOOD L

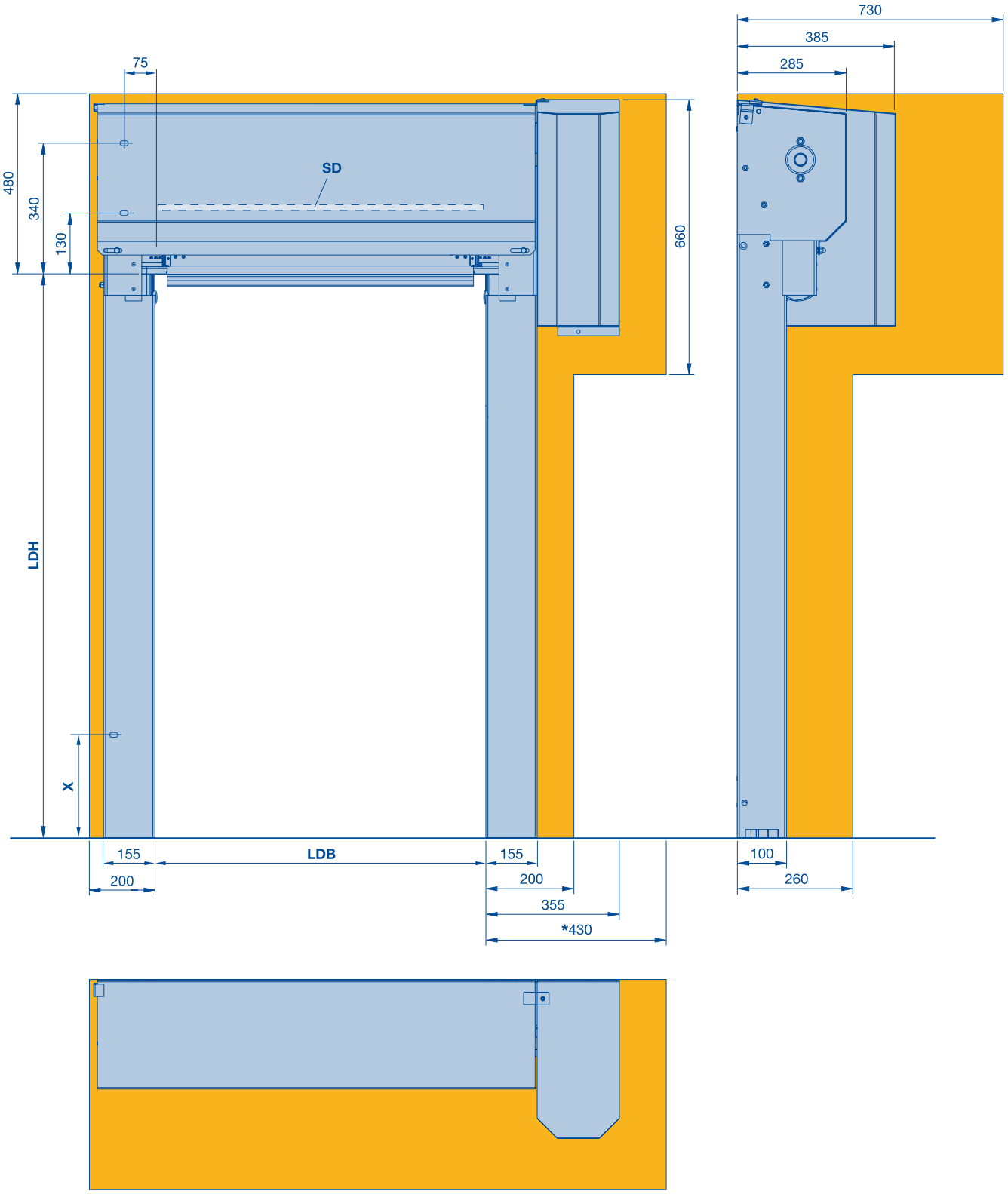

* Space required to dismantle the operator
X Order-related

LDH Clear passage height
LDB Clear passage width
SD Lintel seal = LDH + 170

Vertical High-Speed Doors V 2012

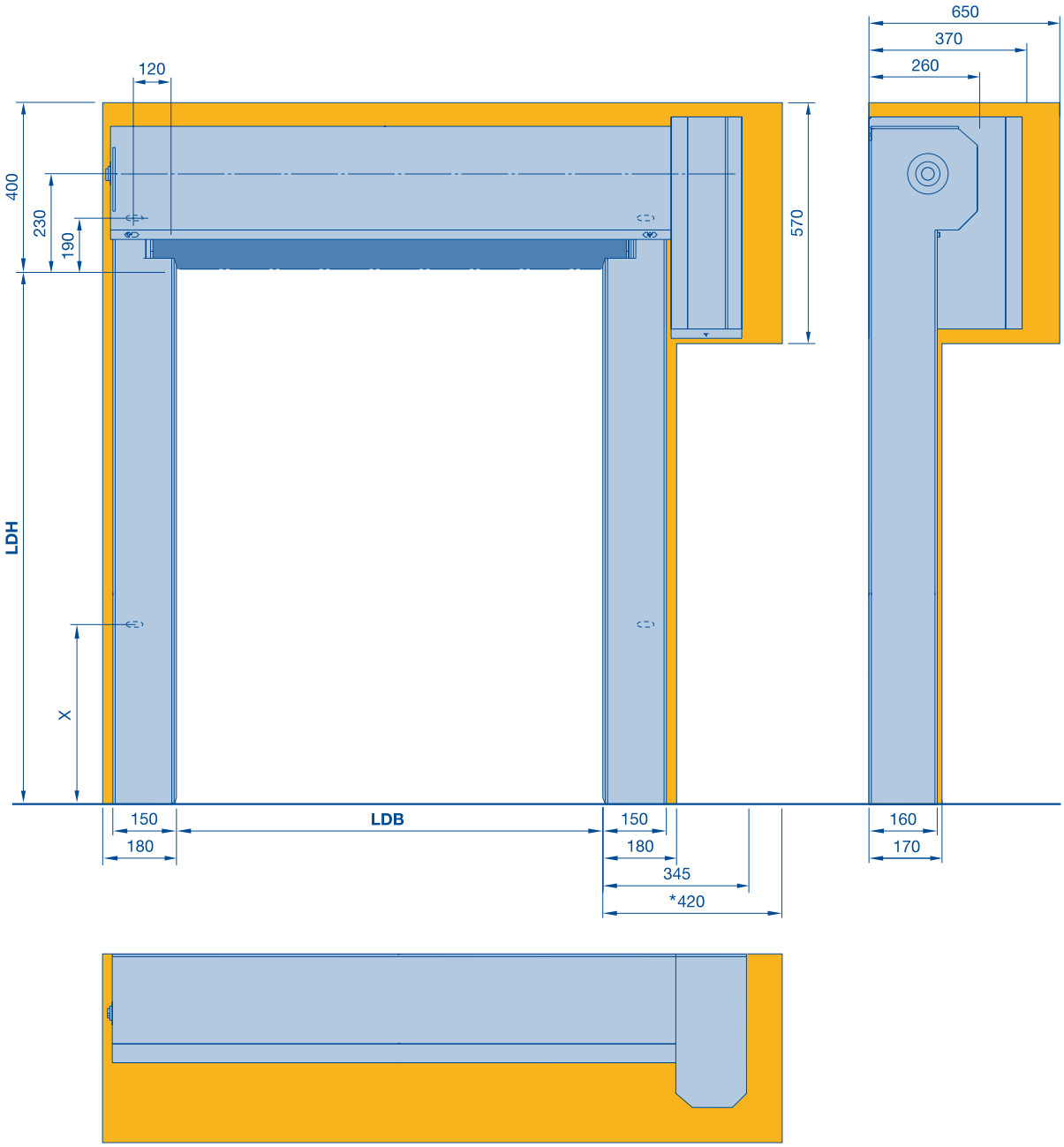

* Space required to dismantle the operator
X Order-related

Vertical High-Speed Doors V 1401 ATEX

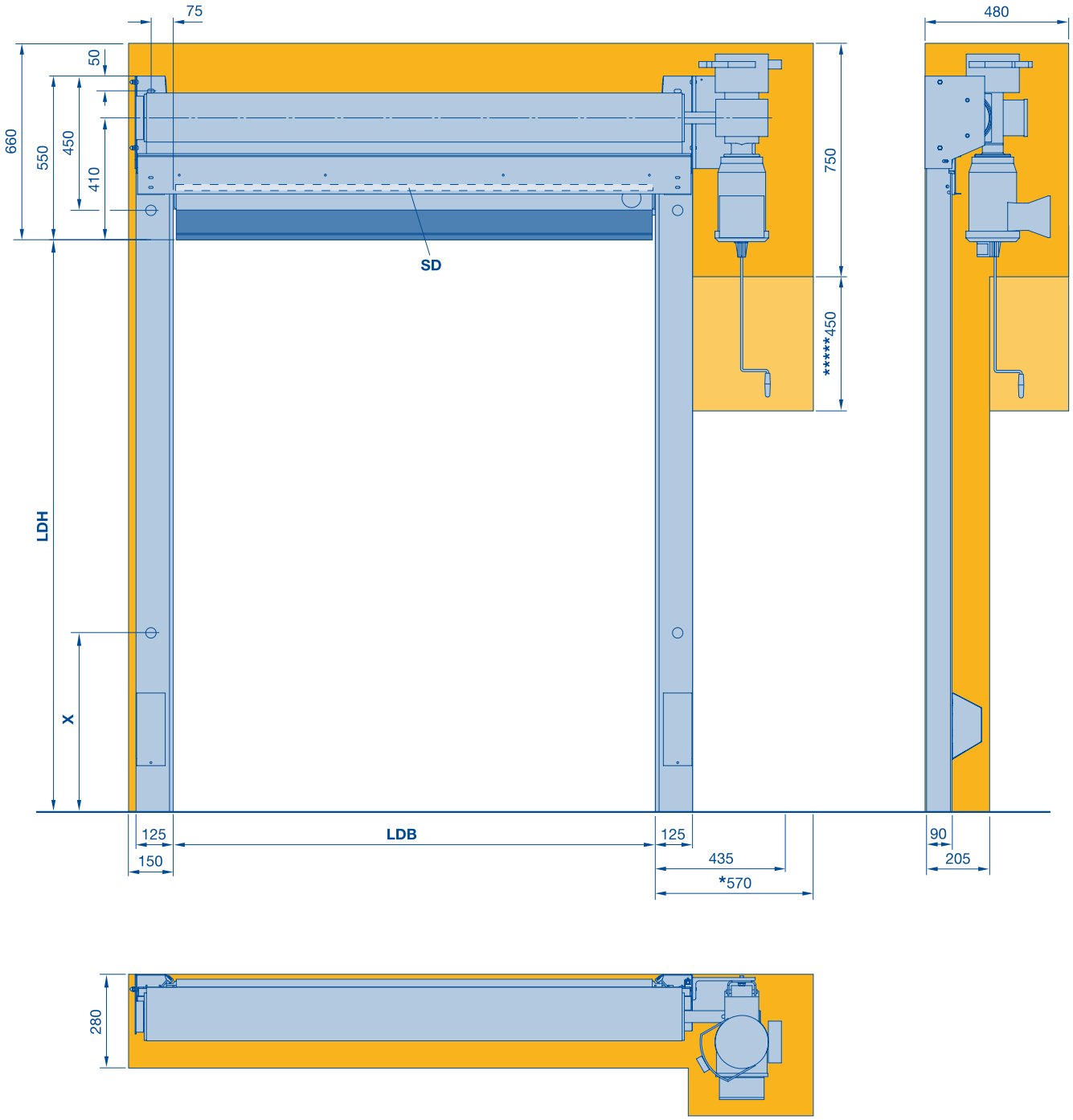

*	Space required to dismantle the operator	**LDH**	Clear passage height
*****	For emergency crank handle	**LDB**	Clear passage width
X	Order-related	**SD**	Lintel seal = LDH + 160

Vertical High-Speed Doors V 1401 ATEX

Full cladding, straight

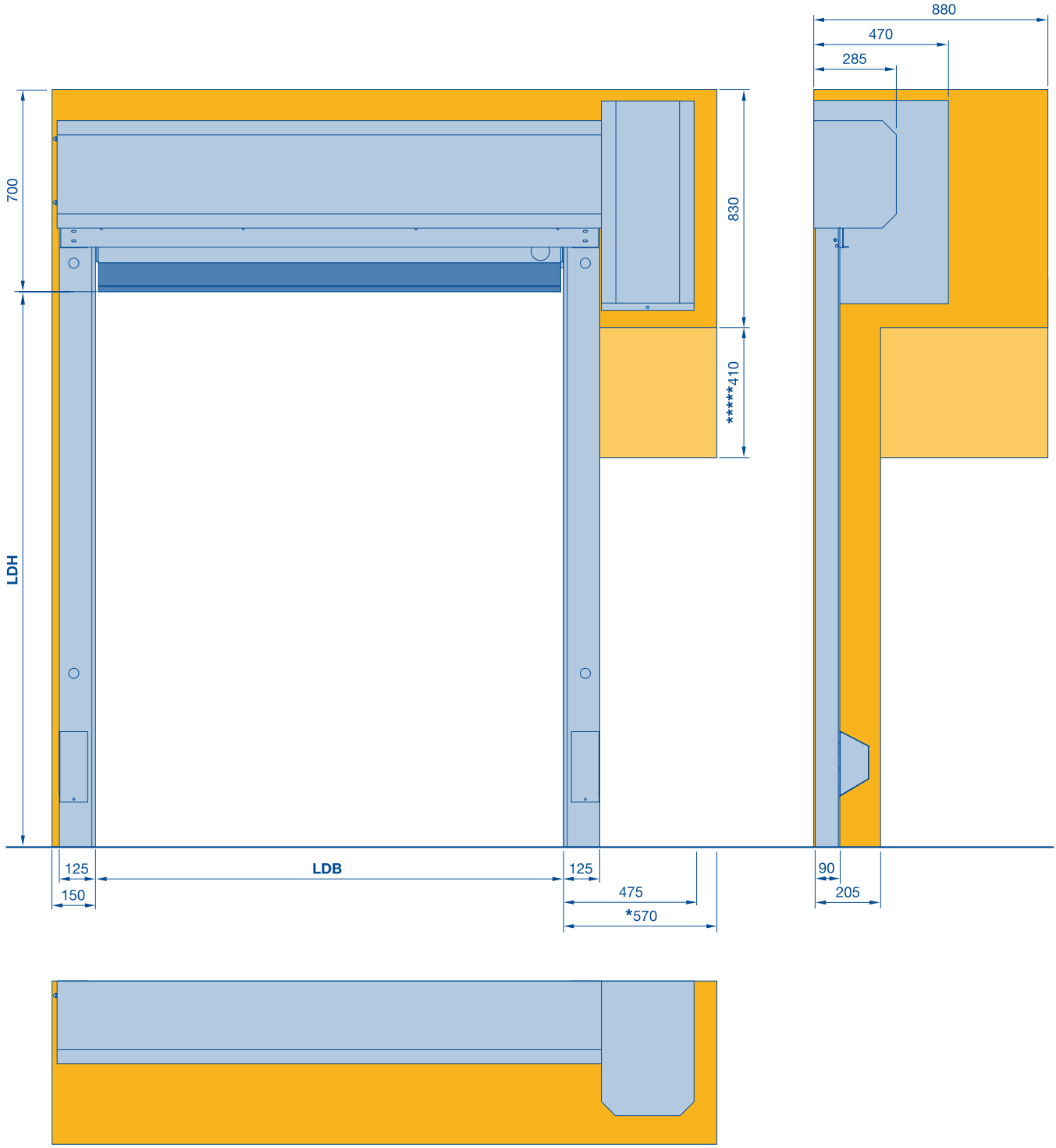

* Space required to dismantle the operator
***** For emergency crank handle

LDH Clear passage height
LDB Clear passage width

Vertical High-Speed Doors V 1401 ATEX

Full cladding, chamfered

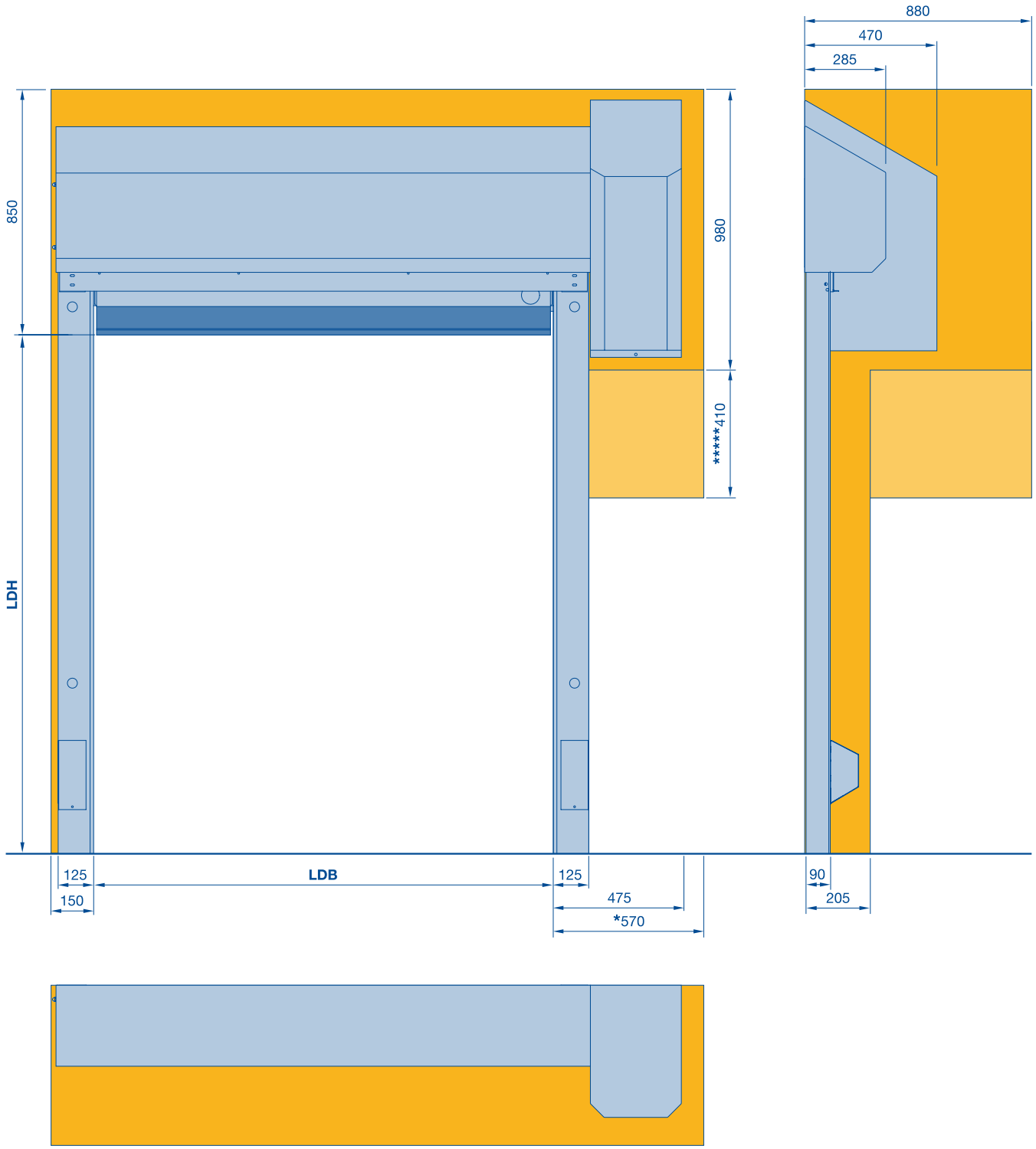

* Space required to dismantle the operator
***** For emergency crank handle

LDH Clear passage height
LDB Clear passage width

Vertical High-Speed Doors V 3015 CLEAN

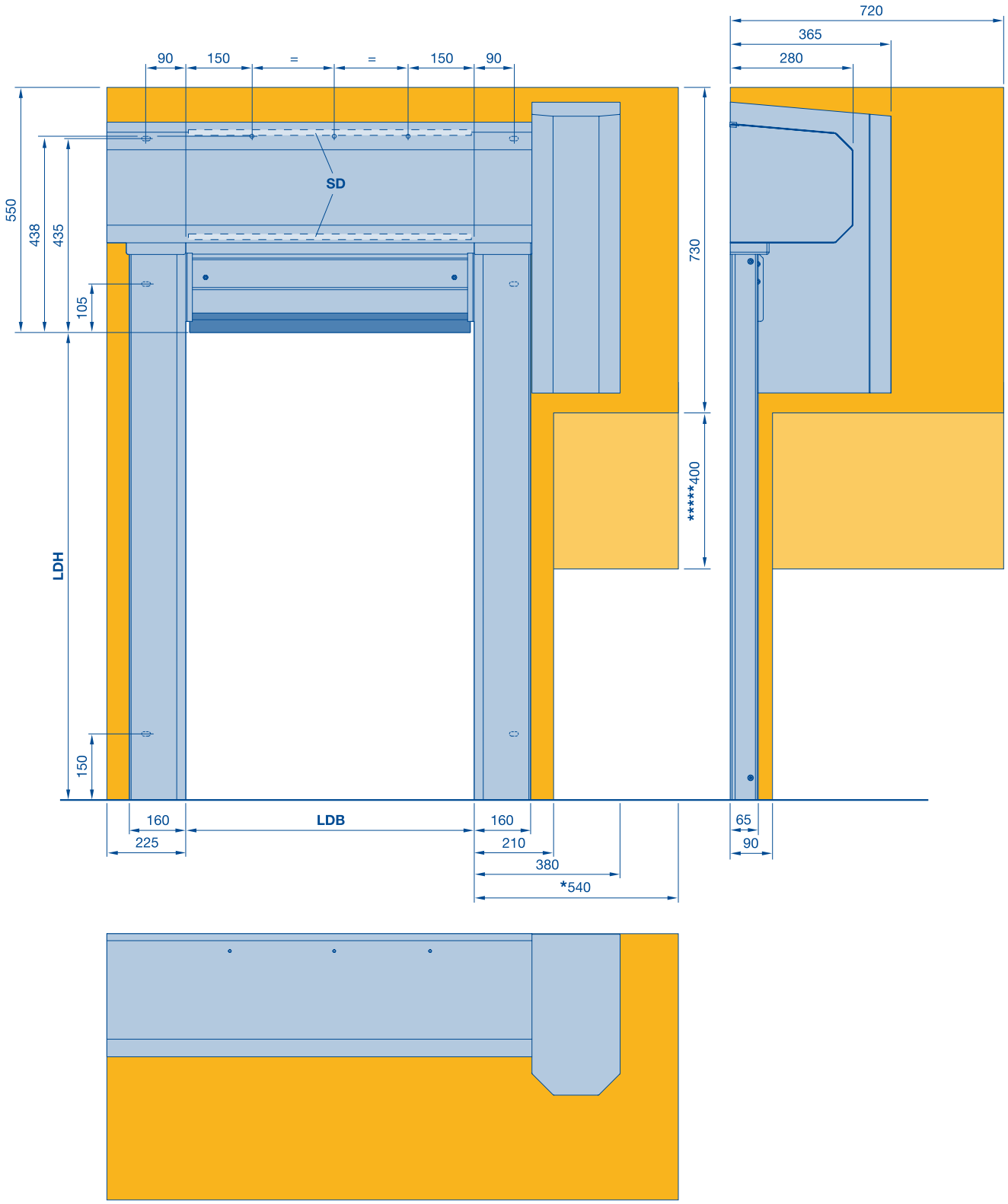

* Space required to dismantle the operator
***** For emergency crank handle

LDH Clear passage height
LDB Clear passage width
SD Lintel seal = LDH + 225 and LDH + 438

Vertical High-Speed Doors V 3009

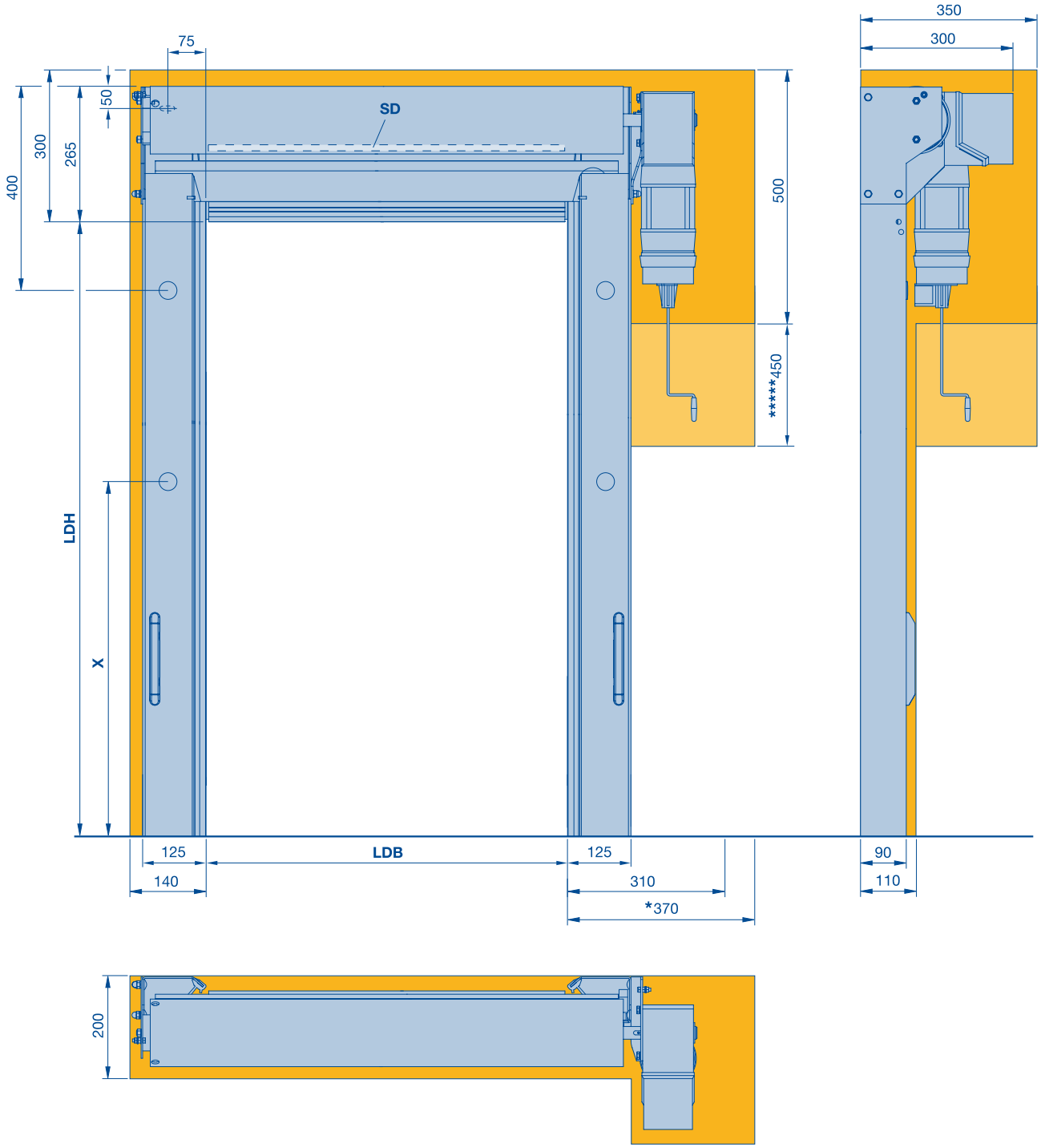

*	Space required to dismantle the operator	**LDH**	Clear passage height
*****	For emergency crank handle	**LDB**	Clear passage width
X	Order-related	**SD**	Lintel seal = LDH + 140

Vertical High-Speed Doors V 3009

Full cladding, straight

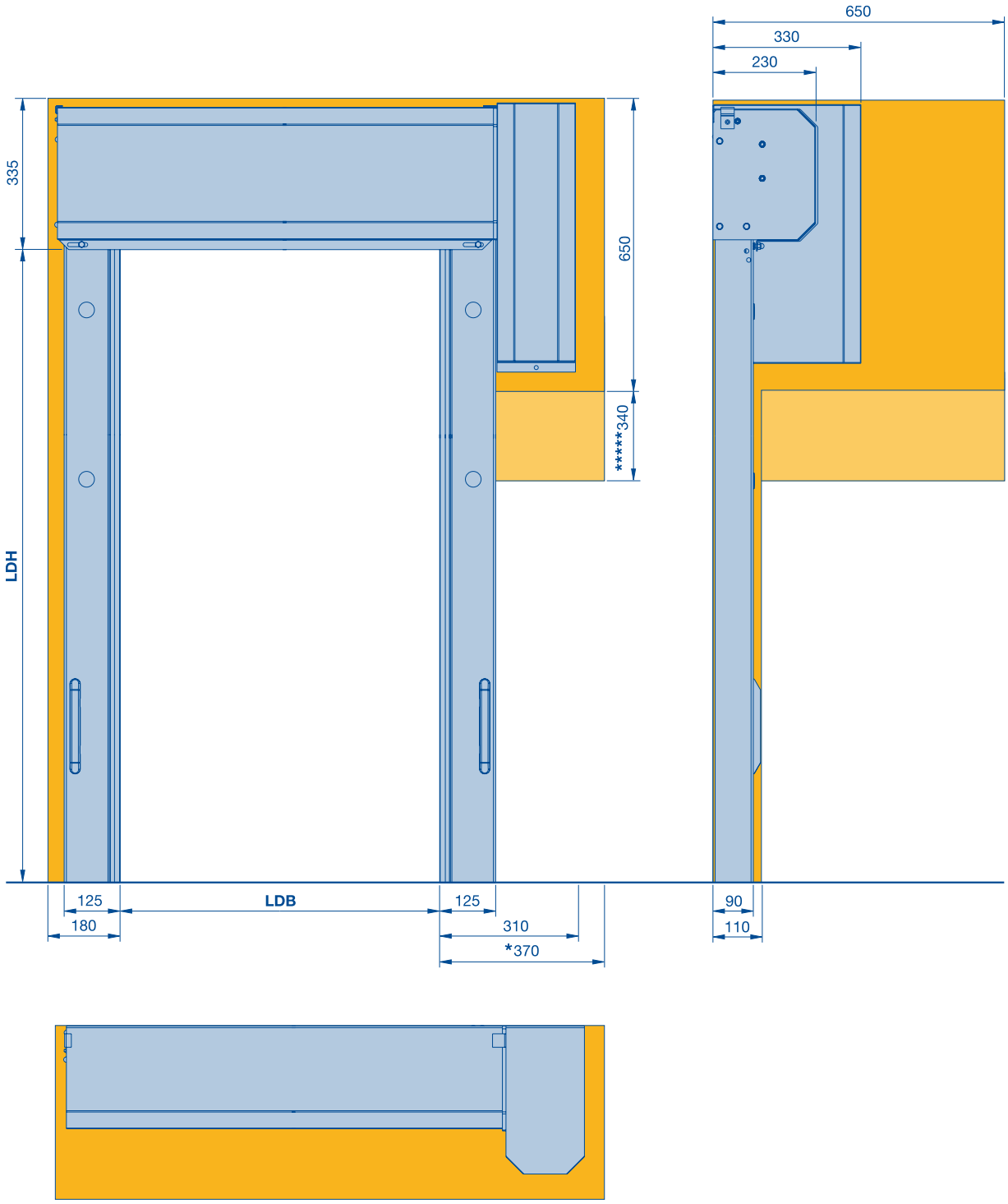

* Space required to dismantle the operator
***** For emergency crank handle

LDH Clear passage height
LDB Clear passage width

Vertical High-Speed Doors V 3009

Full cladding, chamfered

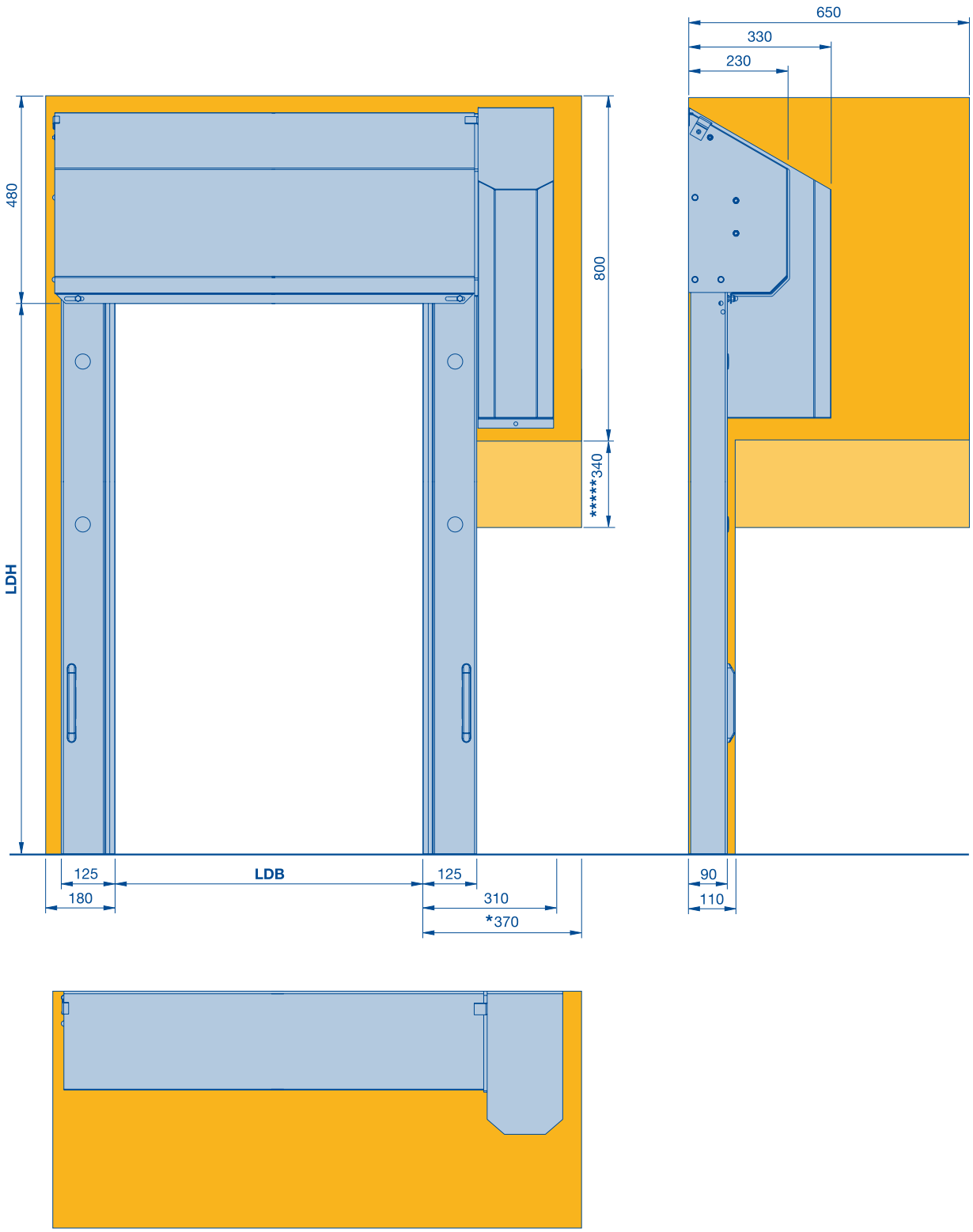

* Space required to dismantle the operator
***** For emergency crank handle

LDH Clear passage height
LDB Clear passage width

Horizontal High-Speed Doors H 3530

Full cladding, straight

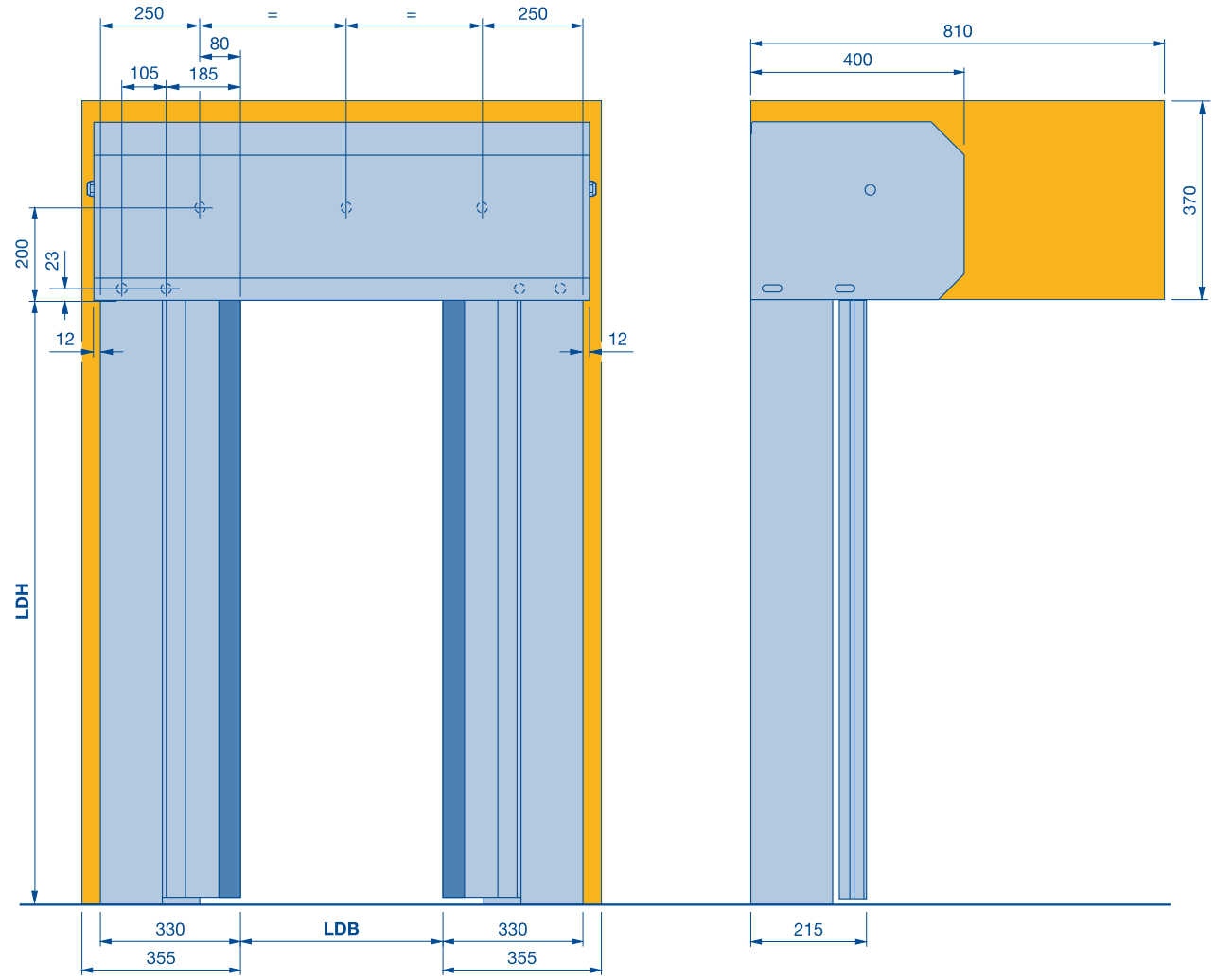

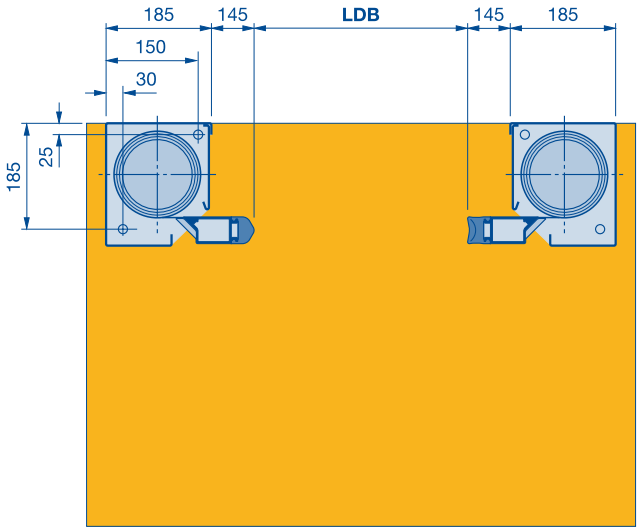

LDH Clear passage height
LDB Clear passage width

Horizontal High-Speed Doors H 3530

Full cladding, chamfered

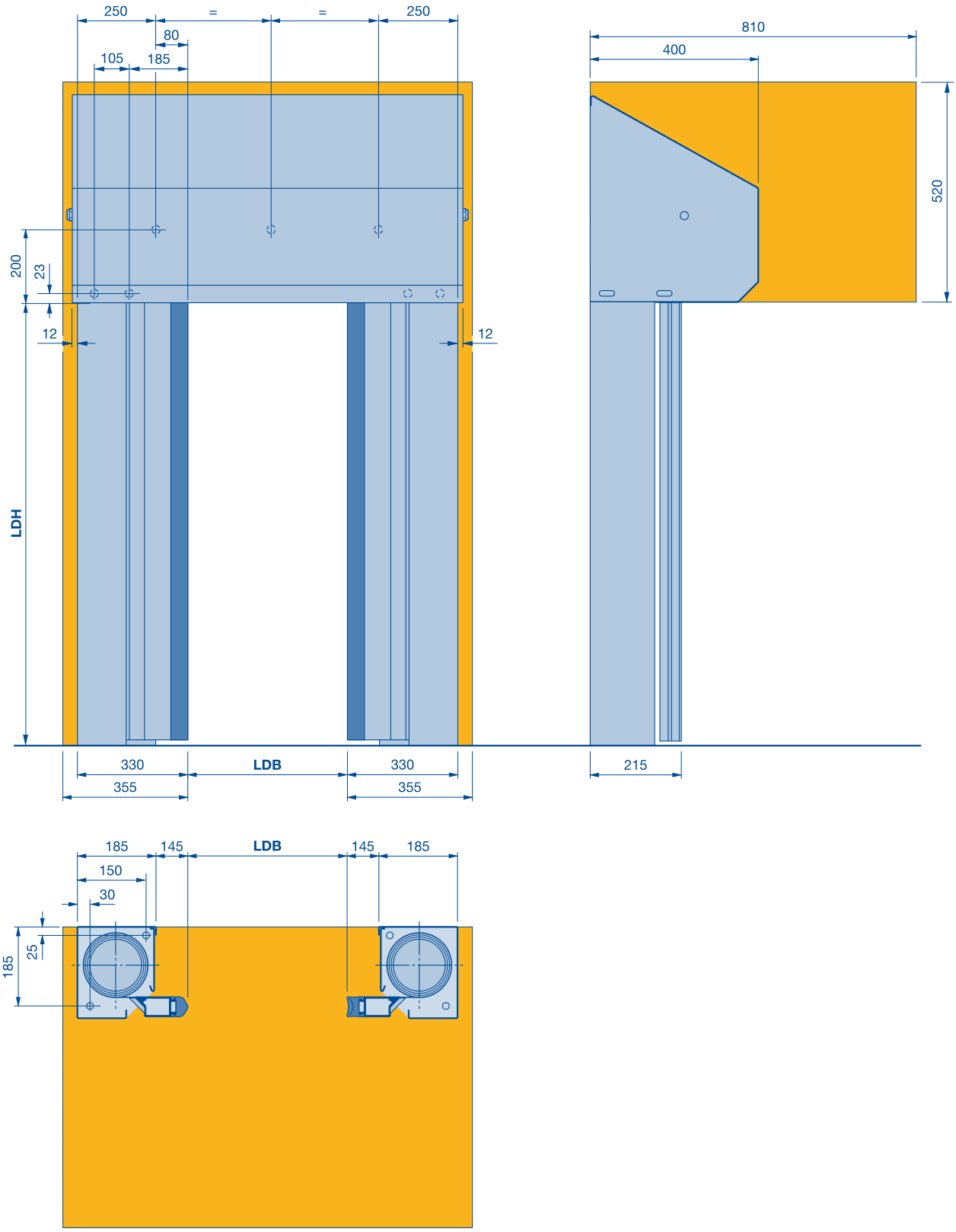

LDH Clear passage height
LDB Clear passage width

Notes

Notes

Hörmann: Quality without Compromise


Hörmann KG Amshausen


Hörmann KG Antriebstechnik


Hörmann KG Brandis


Hörmann KG Brockhagen


Hörmann KG Dissen


Hörmann KG Eckelhausen


Hörmann KG Freisen


Hörmann KG Ichtershausen


Hörmann KG Werne


Hörmann Genk NV, Belgium


Hörmann Alkmaar B.V., Netherlands


Hörmann Legnica Sp. z o.o., Poland


Hörmann Beijing, China


Hörmann Tianjin, China

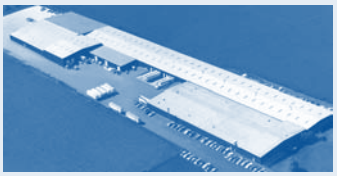
Hörmann LLC, Montgomery IL, USA


Hörmann Flexon, Leetsdale PA, USA

Hörmann is the only manufacturer worldwide that offers you a complete range of all major building products from one source. We manufacture in highly-specialised factories using the latest production technologies. The close-meshed network of sales and service companies throughout Europe, and activities in the USA and China, make Hörmann your strong partner for first-class building products, offering “Quality without Compromise”.

GARAGE DOORS

OPERATORS

INDUSTRIAL DOORS

LOADING EQUIPMENT

HINGED DOORS

DOOR FRAMES

Issue 03.2011/Print 06.2011/HF 84900 EN / PDF

Hörmann (UK) Ltd, Gee Road, Coalville, Leicestershire LE67 4JW
Phone (01530) 513000, Fax (01530) 513001

HÖRMANN